Wisconsin Department of Transportation

Division of Transportation Systems Development
Bureau of Project Development
4802 Sheboygan Avenue, Rm 601
P O Box 7916
Madison, WI 53707-7916

Telephone: (608) 266-1631
Facsimile (FAX): (608) 266-8459

May 5, 2014

NOTICE TO ALL CONTRACTORS:

Proposal #26: 1517-07-72
USH 10 – USH 10/STH 441
County CB – Oneida Street
USH 10
Winnebago County
USH 41 Interchange Phase 1

Letting of May 13, 2014

This is Addendum No. 1, which provides for the following:

Special Provisions

Revised Special Provisions	
Article No.	Description
7.1	Traffic
10.5	Staged Embankment Construction
10.10	Prefabricated Vertical Drains, Item SPV.0090.006; Prebored Prefabricated Vertical Drains, Items SPV.0090.010
14.13	Pond Edge Seed, Item SPV.0085.100

Added Special Provisions	
Article No.	Description
8.1	Reconstructing Sanitary Manholes, Item SPV.0200.050
10.12	On-site Borrow Material
13.4	Wall Concrete Panel Mechanically Stabilized Earth LRFD/QMP Pilot, Item SPV.0165.851
14.14	Salvage & Reinstall Pipe Underdrain and Apron Endwall, Item SPV.0060.005
14.15	Water for Seeded Areas, Item SPV.0120.001.
16.2	Sign Bridge Cantilevered (structure), Item 641.1200; Sign Bridge (structure), Item 641.6600

Deleted Special Provisions	
Article No.	Description
13.2	Wall Wire Faced Mechanically Stabilized Earth LRFD/QMP Pilot, Item SPV.0165.851

Schedule of Items

Revised Bid Item Quantities					
Bid Item	Item Description	Unit	Old Quantity	Revised Quantity	Proposal Total
203.0100	Removing Small Pipe Culverts	Each	1	2	2
204.0100	Removing Pavement	SY	6308	6298	6298
204.0245.001	Removing Storm Sewer 12-Inch – 18-Inch	LF	375	399	399
205.0100	Excavation Common	CY	90,370	90,477	90,477
206.6000.S	Temporary Shoring	SF	1244	1739	1739
305.0110	Base Aggregate Dense 3/4-Inch	TON	1378	1359	1359
305.0120	Base Aggregate Dense 1 1/4-Inch	TON	30,830	31,271	31,271
311.0110	Breaker Run	TON	54,520	54,599	54,599
416.1110	Concrete Rumble Strips Shoulder	LF	5290	2665	2665
465.0125	Asphaltic Surface Temporary	TON	4790	4805	4805
520.8000	Concrete Collars for Pipe	EACH	9	10	10
603.1132	Concrete Barrier Type S32	LF	88	76	76
603.8000	Concrete Barrier Temporary Precast Delivered	LF	8926	9126	9126
603.8125	Concrete Barrier Temporary Precast Installed	LF	15669	15869	15869
614.0905	Crash Cushion Temporary	EACH	8	9	9
624.0100	Water	MGAL	1717	1746	1746
625.0500	Salvaged Topsoil	SY	127,814	128,371	128,371
627.0200	Mulching	SY	53,584	54,141	54,141
628.7005	Inlet Protection Type A	EACH	31	33	33
629.0205	Fertilizer Type A	CWT	74	74.3	74.3
630.0120	Seeding Mixture No. 20	LB	3386	3401	3401
630.0200	Seeding Temporary	LB	3450	3465	3465
643.0900	Traffic Control Signs	Days	26,045	29,862	29,862
690.0150	Sawing Asphalt	LF	173	330	330
SPV.0035.010	Roadway Embankment	CY	357,938	357,907	357,907
SPV.0060.104	Storm Sewer Plug	EACH	4	5	5
SPV.0060.120	Cover Plates Left In Place	EACH	9	8	8
SPV.0090.006	Prefabricated Vertical Drains	LF	479,985	490,490	490,490
SPV.0165.851	Wall Concrete Panel Mechanically Stabilized Earth LRFD/QMP Pilot	SF	12,083	12,068	12,068

Added Bid Item Quantities					
Bid Item	Item Description	Unit	Old Quantity	Revised Quantity	Proposal Total
204.0110	Removing Asphaltic Surface	LF	0	506	506
465.0400	Asphaltic Shoulder Rumble Strip	LF	0	5487	5487
520.4012	Culvert Pipe Temporary 12-Inch	LF	0	96	96
628.6510	Soil Stabilizer Type B	ACRE	0	12	12
SPV.0060.005	Salvage & Reinstall Pipe Underdrain and Apron Endwall	EACH	0	1	1
SPV.0120.001	Water For Seeded Areas	MGAL	0	2840	2840
SPV.0200.050	Reconstructing Sanitary Manholes	VF	0	16	16

Deleted Bid Item Quantities					
Bid Item	Item Description	Unit	Old Quantity	Revised Quantity	Proposal Total
204.0157	Removing Concrete Barrier	LF	12	0	0
204.9060.S.002	Removing Inlet Cover and Casting	EACH	1	0	0

Plan Sheets

Revised Plan Sheets	
Plan Sheet	Plan Sheet Title (brief description of changes to sheet)
3	Utility Contracts (Updated Utility contacts)
36	Construction Detail (Updated 'Curb & Gutter at Inlets' detail)
37	Construction Detail (Removed 'Removing Inlet Cover and Casting' detail)
41	Construction Detail (Updated both 'Prefabricated Vertical Drain Placement Details …')
47	Removal Plans – Sheet 2 (Added removal of parking lot)
53	Removal Plans – Sheet 8 (Added removal of culvert pipe)
56	Removal Plan (Removed work on WIS 441 EB shoulder)
61	Plan Detail – Prefabricated Vertical Drains (Updated drain tip elevation)
66	Plan Detail – Prefabricated Vertical Drains (Updated location and spacing information)
77	Paving Grades (Updated paving grades)
78	Paving Grades (Updated paving grades)
79	Paving Grades (Updated paving grades)
93	Erosion Control (Added inlet protection)
102	Storm Sewer (Revised rim elevations)
104	Storm Sewer (Added location of temporary storm sewer in plan view)
119	Traffic control – Typical Sections (Updated dimensions and station range)
122	Traffic control – Temporary Ramp Paving Grades (Updated paving grades)
125	Traffic Control Alignment – Temporary Ramps (Updated alignment information)
127	Traffic Control – Plan & Profile Temporary Ramp TNE (Updated profile)
131	Traffic Control – Construction Details (Added Emergency Access sign to detail)
132	Traffic Control – Construction Details (Added Emergency Access sign to detail)
138	Traffic Control Plan – Preliminary Stage Sheet 3 (Extended temporary barrier)
143	Traffic Control Plan – Preliminary Stage Sheet 3 (Extended temporary barrier)
149	Traffic Control Plan – Stage 1A & 1B Sheet 2 (Moved traffic control to match realigned ramp)
155	Traffic Control Plan – Stage 1A & 1B Sheet 8 (Added temp barrier)
156	Traffic Control Plan – Stage 1A & 1B Sheet 9 (Added temp barrier)
161	Traffic Control Left In Place Plan – Sheet 2 (Added coordination note)
166	Alignment – USH 41 WB (Updated USH 10 WB alignment information)
172	Alignment – System Interchange Ramps (Updated FNE1 curve information)
173	Alignment – System Interchange Ramps (Updated FNW4 curve information)
174	Alignment – System Interchange Ramps (Updated FWS3 curve information)
184	Miscellaneous Quantities (Revised 'Removing Pavement' & 'Removing Small Pipe Culverts' tables and deleted 'Removing Concrete Barrier' table)
185	Miscellaneous Quantities (Revised 'Removing Storm Sewer' table and deleted 'Removing Inlet Cover and Casting' table)
186	Miscellaneous Quantities (Revised 'Earthwork' table)
187	Miscellaneous Quantities (Revised 'Aggregate Items' & 'Rumble Strips' tables)
188	Miscellaneous Quantities (Revised 'Pavement Items' table)
189	Miscellaneous Quantities (Revised 'Culvert Pipes' table and added 'Culvert Pipe Temporary' table)
190	Miscellaneous Quantities (Revised 'Storm Sewer Structures' table)
191	Miscellaneous Quantities (Revised 'Storm Sewer Pipes' table)

192	Miscellaneous Quantities (Revised 'Concrete Barrier' & 'Pipe Underdrain' tables)
194	Miscellaneous Quantities (Revised 'Water' & 'Restoration' tables)
195	Miscellaneous Quantities (Revised 'Inlet Protection' table)
199	Miscellaneous Quantities (Revised 'Traffic Control' table)
200	Miscellaneous Quantities (Revised 'Sawcuts' table)
201	Miscellaneous Quantities (Added 'Reconstructing Sanitary Manholes' table)
202	Miscellaneous Quantities (Revised 'Prefabricated Vertical Drains' table)
209	Plan & Profile – USH 10 WB (Updated profile)
211	Plan & Profile – USH 10 WB (Added Salvage and Reinstall Pipe Underdrain and Apron Endwall)
348	B-70-402 (Added Temporary Shoring at Pier 5 between Lake Street and Pier 5)
349	B-70-402 (Revised estimated quantity for Temporary Shoring)
367	B-70-402 (Added Temporary Shoring at Pier 5)
404	C-70-42 – Apron and Wingwall Details (Removed dowel bar between wingwall and box wall)
411	C-70-54 – Apron and Wingwall Details (Removed dowel bar between wingwall and box wall)
441	R-70-115 – Design Data and Quantities (Revised top of wall elevations and wall quantity)
472	Earthwork Summary (Revised USH 41 NB 3 earthwork)
481	Earthwork Summary (Revised TNE Ramp earthwork)
511	Cross Sections – USH 41 NB (Revised USH 41 NB cross-sections)
512	Cross Sections – USH 41 NB (Revised USH 41 NB cross-sections)
513	Cross Sections – USH 41 NB (Revised USH 41 NB cross-sections)
514	Cross Sections – USH 41 NB (Revised USH 41 NB cross-sections)
515	Cross Sections – USH 41 NB (Revised USH 41 NB cross-sections)
626	Cross Sections – TNE Ramp (Revised TNE cross-sections)
627	Cross Sections – TNE Ramp (Revised TNE cross-sections)
628	Cross Sections – TNE Ramp (Revised TNE cross-sections)
629	Cross Sections – TNE Ramp (Revised TNE cross-sections)
630	Cross Sections – TNE Ramp (Revised TNE cross-sections)

Added Plan Sheets	
Plan Sheet	Plan Sheet Title (brief description of why sheet was added)
43A	Construction Details (Added reconstruction sanitary manholes)
104A	Storm Sewer – Temporary (Added temporary storm sewer)
149A	Traffic Control Plan – Stage 1A & 1B 'Coordinate with 1517-07-76' (Added traffic control coordination with adjacent 1517-07-76 project
630A	Cross Sections – TNE Ramp (Added Station 29TNE+83)

The responsibility for notifying potential subcontractors and suppliers of these changes remains with the prime contractor.

Sincerely,

Mike Coleman

Proposal Development Specialist
Proposal Management Section

ADDENDUM NO. 1

1517-07-72

May 5, 2014

Special Provisions

7.1 Traffic.

Add the following paragraph as the last paragraph under the heading ***Construction Access*** *(Page 22 of 164).*

Contractor access to the construction zone east of Little Lake Bette des Morts shall be accessed from Wis441at the Racine Road exit and follow Racine Road south to 9th Street, west to Tayco Street and north to the construction site. Construction egress shall follow the route in reverse.

8.1 Reconstructing Sanitary Manholes, Item SPV.0200.050.

A Description
Reconstruct sanitary manholes in accordance to the plans and specifications, Section 611 of the Standard Specifications and, the 6th Edition Standard Specification for Sewer & Water Construction in Wisconsin.

B Materials
Furnish precast manhole sections as described in chapter 3.5.3 of the Standard Specifications for Sewer and Water Construction in Wisconsin of the height required to create a finished manhole according to plan elevations. Contractor shall verify manhole dimensions and vertical height adjustment prior to ordering materials.

Salvage and reuse manhole cone sections. Install new castings in accordance with the bid items provided in the contract.

Furnish concrete grade rings meeting the requirements of chapter 8.39.11 of the Standard Specifications for Sewer and Water Construction in Wisconsin. Minimum thickness for concrete rings shall be 2-Inches. Butyl joint sealant shall be placed between rings.

Furnish internal chimney seals that meet the requirements of chapter 8.42 and File No. 12A of the Standard Specifications for Sewer and Water Construction in Wisconsin.

C Construction
Reconstruction includes removal of the frame, cover, casting, adjusting rings and cone, installation of new barrel sections of appropriate height, reinstallation of the cone, placement of new undamaged adjusting rings, installation of the internal chimney seal, and resetting of the frame and cover. Remove existing frames, covers, castings and manhole cone sections with care to prevent damage. All joints shall be water tight at the time of construction.

Lay grade rings on a bead of flexible joint sealant. If the top of the precast riser is uneven, the engineer may require a 1 ¼” diameter flexible sealant to be used. Frames shall be placed on a 3 ½” x 3/8” bed of flexible joint sealant.

D Measurement
The department will measure Reconstructing Sanitary Manholes by the vertical foot acceptably completed. Measure the depth of the manhole along the centerline, from existing top of rim elevation to finished top of rim elevation.

E Payment

The department will pay for measured quantities at the contract unit price under the following bid item:

ITEM NUMBER	DESCRIPTION	UNIT
SPV.0200.050	Reconstructing Sanitary Manholes	VF

Payment is full compensation for removal of existing manhole cone section, frames, covers, castings and internal chimney seal (if applicable); for furnishing and installing additional precast concrete manhole sections and steps; for all excavation and backfill; for reinstalling manhole cone section and steps; for installing adjustment rings; for installation of internal chimney seal; for disposal of surplus material, cleanup, and restoring site work; and for furnishing all labor, tools, equipment, materials, and incidentals necessary to complete the contract work. No additional monies will be paid to the contractor for replacement of existing manhole cone sections due to damage caused by the contractor's removal operations. Payment for covers and frames will be paid for under other items provided in the contract. (NER41-20100201)

10.5 Staged Embankment Construction.

Replace the table after the fourth paragraph with the following table (Page 39 of 164).

Area	Beginning Station	Ending Station	Feature(s)	Estimated Settlement (feet)	Total Number of Phases	Max Embank-ment Thickness/ Phase (feet) *	Estimated Wait Period/ Phase (Months)
A	1335FNE+09.41	1340FNE+00	Embankment + B-70-402, B-70-400	1½ to 2	1	40	4
B-70-403 West Abut.	1340FNE+00	1342FNE+70.00	B-70-403 (2)	2 to 2½	2#**	32/20	4
B	120WB+00	128WB+12.48	Embankment	½ to ¾	1	35	4
C	126WB+75.00	133WB+00.00	Embankment + B-70-401	¾ to 1½	1	52	4
D	122FEN+50	125FEN+90.10	Embankment	½ to 1	1	27	2
E	1324FNE+50	1331FNE+29.16	Embankment + R-70-102, B-70-402, C-70-42	¾ to 1¼	1	24	2
F	136FEN+66.00	140FEN+00.00	Embankment + B-70-409	½ to 1	1	25	2
G	132FWN+00.00	135FWN+25.00	R-70-121	1/3 to 1/2	1	10	4
H	152FEN+91	154+97.24	R-70-100	1/3	1	16	3
I	1365SB+00	1365SB+50	Embankment	1 to 1½	1	8	3

J	179EB+63	183EB+75	B-70-403, Embankment	1½ to 2	1	30	4

10.10 Prefabricated Vertical Drains, Item SPV.0090.006; Prebored Prefabricated Vertical Drains, Items SPV.0090.010.

*Replace the table after the seventh paragraph under the heading **C Construction** with the following table (Page 53 of 164).*

Area	Beginning Station	Ending Station	Feature	Average PVD Tip Elevation	PVD Equilateral Triangular Spacing (feet)
A*	1335FNE+09.41	1342FNE+70.00	Embankment + B-70-402, B-70-400 B-70-403	710	5
B	120WB+00.00	128WB+12.48	Embankment	744	5
C	126WB+75.00	133WB+00.00	Embankment + B-70-401	744	5
D	122FEN+50.00	125FEN+90.10	Embankment	741	5
E	1324FNE+50.00	1331FNE+29.16	Embankment + R-70-102, B-70-402, C-70-42	737	5
F	136FEN+66.00	140FEN+00.00	Embankment + B-70-409	734	5
G	132FWN+00.00	135FWN+25.00	R-70-121	734	4
I	1365SB+00	1365SB+50	Embankment	715	5
J**	179EB+63	183EB+75	Embankment, B-70-403	725	5

10.12 On-site Borrow Material.

No borrow may be taken from areas inside the System Interchange ramps unless included in plan cross-section. Areas of remnant fills not address in the plan will be used in future contracts

13.2 DELETED

13.4 Wall Concrete Panel Mechanically Stabilized Earth LRFD/QMP Pilot, Item SPV.0165.851.

A Description

This special provision describes designing, furnishing materials and erecting a permanent earth retention system in accordance to the lines, dimension, elevations and details as shown on the plans and provided in the contract. The design life of the mechanically stabilized earth (MSE) wall and all wall components shall be 75 years minimum.

This special provision describes the quality management program (QMP) for MSE walls. A quality management program is defined as all activities, including process control, inspection, sampling and testing, and necessary adjustments in the process that are related to the construction of the MSE wall, which meets all the requirements of this provision.

This special provision describes contractor quality control (QC) sampling and testing for backfill density testing, documenting those results, and documenting related production and placement process changes. This special provision also describes department quality verification (QV), independent assurance (IA), and dispute resolution.

Chapter 8 of the department's construction and materials manual (CMM) provides additional detailed guidance for QMP work and describes sampling and testing procedures. The contractor may obtain the CMM from the department's web site at:

http://roadwaystandards.dot.wi.gov/standards/cmm/index.htm

B Materials

B.1 Proprietary Mechanically Stabilized Earth Concrete Panel Wall Systems

The supplied wall system must be from the department's approved list of Concrete Panel Mechanically Stabilized Earth Wall systems (Concrete Panel MSE Walls).

Proprietary wall systems may be used for this work, but must conform to the requirements of this specification and be pre-approved for use by the department's Bureau of Structures, Structures Design Section. The department maintains a list of pre-approved Concrete Panel Mechanically Stabilized Earth Wall systems. To be eligible for use on this project, a system must have been pre-approved and added to that list prior to the bid opening date. The name of the pre-approved proprietary wall system selected shall be furnished to the engineer within 25 days after the award of contract. The location of the plant manufacturing the concrete panels shall be furnished to the engineer at least 14 days prior to the start of panel production.

To receive pre-approval, the retaining wall system must comply with all pertinent requirements of this provision. Applications for pre-approval may be submitted at any time. Applications must be prepared in accordance to the requirements of Chapter 14 of the department's LRFD Bridge Manual. Information and assistance with the pre-approval process can be obtained by contacting the Structures Design Section in Room 601 of the Hill Farms State Transportation Building in Madison or by calling (608) 266-8494.

B.2 Design Requirements

It is the responsibility of the contractor to supply a design and supporting documentation as required by this special provision, for review by the department, to show the proposed wall design is in compliance with the design specifications. Four copies of the following shall be submitted to the engineer for review and acceptance no later than 60 days from the date of notification to proceed with the project.

The plans and shop drawings shall be prepared on reproducible sheets 11 inch x 17 inch, including borders. Each sheet shall have a title block in the lower right corner. The title block shall include the project identification number and structure number. Design calculations and notes shall be on 8 ½ inch x 11 inch sheets, and shall contain the project identification number, name or designation of the wall, date of preparation, initials of designer and checker, and page number at the top of the page. All plans, shop drawings, and calculations shall be signed, sealed and dated by a professional engineer licensed in the State of Wisconsin.

The design of the Concrete Panel MSE wall shall be in compliance with the *AASHTO LRFD Bridge Design Specifications 5th Edition 2010*, (AASHTO LRFD) with latest interim specifications for Mechanically Stabilized Earth Walls, WisDOT's current *Standard Specifications for Highway and Structure Construction* (Standard Specifications), Chapter 14 of the WisDOT LRFD Bridge Manual and standard engineering design procedures as determined by the Department. Loads, load

combinations, load and resistance factors shall be as specified in AASHTO LRFD Section 11. The associated resistance factors shall be defined in accordance with Table11.5.6-1 LRFD.

Design and construct the walls in accordance to the lines, grades, heights and dimensions shown on the plans, as herein specified, and as directed by the engineer. Where walls or wall sections intersect with an included angle of 130 degrees or less, a vertical corner element separate from the standard panel face shall abut and interact with the opposing standard panels. The corner element shall have ground reinforcement connected specifically to that panel and shall be designed to preclude lateral spread of the intersecting panels. If the wall is installed in front of a bridge abutment or wing, it shall also be designed to resist the applied abutment/bridge lateral forces specified on the contract plans.

Walls parallel to supporting highway traffic shall be designed for the effects of highway surcharge loading equivalent of 2 feet soil surcharge weight or 240 psf. The design shall also consider the traffic barrier impact where applicable. Walls that do not carry highway traffic shall be designed for a live load surcharge of 100 psf in accordance with Chapter 14 of the WisDOT LRFD Bridge Manual or as stated on the plans.

A maximum value of the angle of internal friction of the wall backfill material used for design shall be assumed to be 30 degrees without a certified report of tests. If a certified report of tests yields an angle of internal friction greater than 30 degrees, the larger test value may be used for design, up to a maximum value of 36 degrees.

An external stability check at critical wall stations showing Capacity Demand Ratios (CDR) for sliding, eccentricity, and bearing checks is performed by the department and are provided on the wall plans.

The design of the Concrete Panel Mechanically Stabilized Earth wall by the Contractor shall consider the internal and compound stability of the wall mass in accordance with AASHTO LRFD 11.10.6. The internal stability shall include soil reinforcement pullout, soil reinforcement rupture, and panel-reinforcement connection failure at each soil reinforcement level. The design shall be performed using the Simplified Method or Coherent Gravity Method. Calculations for factored stresses and resistances shall be based upon assumed conditions at the end of the design life. Compound stability shall be computed for the applicable strength limits.

Facing panels shall meet the design requirements of AASHTO LRFD 11.10.2.3. The Facing panels shall also be designed to resist compaction stresses that occur during the wall erection. The minimum thickness of the Facing panel shall be 5.5 inches. The surface area of a standard single panel cannot exceed 60 square feet. The maximum height of a standard panel shall be 5 feet. The top and bottom panels may exceed 5 foot in height based on site topography subject to the approval by the Structures Design Section. The design of the steel reinforcement within the panels shall be based on one-way bending action. Design the wall panels and joints between panels to accommodate a maximum differential settlement of 1 foot over a 100-foot length, unless the plans indicate other.

The minimum length of soil reinforcement measured from the back face of the wall shall be equal to 0.7 the wall height or as shown on the plan. In no case shall this length be less than 8 feet. The soil reinforcement length shall be the same from the bottom to the top of the wall. The soil reinforcement shall extend a minimum of 3.0 feet beyond the theoretical failure plane in all cases. The maximum vertical spacing of soil reinforcement layers shall be 31 inches. The uppermost layer of the reinforcement shall be located between 6 inches and 18 inches below the bottom of an overlying slab, footing or top of the wall. The upper layers of the soil reinforcement shall also be checked to verify that they have sufficient tensile resistance against traffic barrier impact where applicable.

All soil reinforcement steel required for the reinforced soil zone shall be connected to the face panels. The reinforcement and the reinforcement/facing connection strength shall be designed to

resist maximum factored reinforcement loads in accordance with AASHTO LRFD Section 11.10.6. Facing connection strength shall be defined as the resistance factor times the failure load, or the load at 0.5 inch deformation times 0.9, whichever is less. The nominal long term design strength in steel reinforcement and connections shall be based upon assumed conditions at the end of the design life.

Soil reinforcement shall be prefabricated into single or multiple elements before galvanizing. Soil reinforcement shall be fabricated or designed to avoid piling, drainage structures or other obstacles in the fill without field modifications. Cutting or altering of the basic structural section of either the strip or grid at the site is prohibited unless approved by the Structures Design Section. A minimum clearance of 3" shall be maintained between any obstruction and reinforcement unless otherwise approved by the Structures Design Section. Splicing steel reinforcement is not allowed, unless approved by the Structures Design.

MSE facing panels shall be installed on concrete leveling pads. The minimum cross section of the leveling pad shall be 6-inches deep by 1-foot wide. Potential depth of frost penetration at the wall location shall not be considered in designing the wall for depth of leveling pad.

Submit the following to the engineer for review: complete design calculations, explanatory notes, supporting materials, specifications, and detailed plans and shop drawings for the proposed wall system. Sample analyses and hand output shall be submitted to verify the output by the software. The design calculations and notes shall clearly indicate the Capacity to Demand Ratios (CDR) for all internal stabilities as defined in AASHTO LRFD.

The wall submittal package shall be submitted electronically to the project engineer and Structures Design Section. Submit all required information no later than 30 days prior to beginning construction of the wall. The detailed plans and shop drawings shall include all details, dimensions, quantities and cross-sections necessary to construct the walls.

B.3 Wall System Components

Materials furnished for wall system components under this contract shall conform to the requirements of this specification. All certifications related to material and components of the wall systems specified in this subsection shall be submitted to the engineer.

B.3.1 General

The walls shall have modular precast concrete face panels produced by a wet cast process, and have cast-in-place concrete pads or footings. The concrete panels shall have a minimum strength of 4000 psi at 28 days. The concrete for the panels shall be air entrained, with an air content of 6% +/- 1.5%. All materials for the concrete mixture for the panels shall meet the requirements of Section 501 of the WisDOT Standard Specifications for Highway and Structure Construction. The panel edges shall be configured so as to conceal the joints. The detail shall be a shiplap, tongue and groove or other detail adequate to prevent vandalism or ultraviolet light damage to the backside of the wall joint covering. Joints between panels shall be no more than 0.75 inch. Use full wall height slip joints at points of differential settlement when detailed on the plan. Horizontal joints must be provided with a compressible bearing material to prevent concrete to concrete contact.

A minimum of two bearing pads shall be used per panel. The allowable bearing stress shall not exceed 900 psi. The bearing pads shall be preformed EPDM rubber conforming to ASTM D-2000, Grade 2, Type A, Class A with a minimum Durometer Hardness of 80, or high- density polyethylene pads with a minimum density of 0.034 lb/in^3 in accordance with ASTM 1505.

An 18-inch wide geotextile shall be used on the backface of the wall panels to cover all panel joints. The geotextile shall meet the physical requirements stated in subsection 645.2.4 of the standard specifications for Geotextile Fabric, Type DF, Schedule B, except that the grab tensile strength shall be a minimum of 180 pounds in both the machine and cross-machine directions. The geotextile shall

be attached with a standard construction adhesive suitable for use on concrete surfaces and cold temperatures. The adhesive shall be applied to the panels, not to the geotextile.

All steel portions of the wall system exposed to earth shall be galvanized. All soil reinforcement and attachment devices shall be carefully inspected to insure they are true size and free from defects that may impair the strength and durability.

For cast in place sections of cap and coping, use poured concrete masonry Grade A, A-FA, A-S, A-T, A-IS or A-IP concrete conforming to standard specification section 501 as modified in standard specification section 716. Provide QMP for cast in place cap and coping concrete as specified in standard specification section 716, Class II Concrete.

Use a wall leveling pad that consists of poured concrete masonry, Grade A, A-FA, A-S, A-T, A-IS or A-IP concrete conforming to standard specification section 501 as modified in standard specification section 716. Provide QMP for leveling pad concrete as specified in standard specification section 716, Class II Concrete.

The minimum embedment to the top of the leveling pad shall be 1 foot 6 inches or as given on the plan or given in AASHTO LRFD 11.10.2.2 whichever is greater. Step the leveling pad to follow the general slope of the ground line. The leveling pad's steps shall keep the bottom of the wall within one half the panel heights of the minimum embedment i.e. the minimum embedment plus up to one half the height of one panel. Additional embedment may be detailed by the contractor, but will not be measured for payment.

B.3.2 Backfill

Furnish and place backfill for mechanically stabilized earth concrete panel walls as shown on the plans and as hereinafter provided.

Provide and use backfill that consists of natural sand or a mixture of sand with gravel, crushed gravel or crushed stone. It shall not contain recycled or milled asphalt, recycled concrete, foundry sand, bottom ash, blast furnace slag or other potentially corrosive material.

Provide material conforming to the following gradation requirements as per AASHTO T27.

Sieve Size	Percentage by Weight Passing
1 inch	100
No. 40	0 - 60
No. 200	0 - 15

The material shall have a liquid limit not greater than 25, as per AASHTO T89, and a plasticity index not greater than 6, as per AASHTO T90. Provide the percent by weight, passing the #4 sieve.

In addition, backfill material shall meet the following requirements.

Test	Method	Value
pH	AASHTO T-289	5 – 10.0
Sulfate content	AASHTO T-290	200 ppm max.
Chloride content	AASHTO T-291	100 ppm max.
Electrical Resistivity	AASHTO T-288	3000 ohm/cm min.
Organic Content	AASHTO T-267	1.0% max.
Angle of Internal Friction	AASHTO T-236*	30 degrees min. (At 95.0% of maximum density and optimum moisture, per

AASHTO T99, or as
modified by C.2.)

*If the amount of P-4 material is greater than 60%, use AASHTO 236 with a standard-size shear box. Test results of this method may allow the use of larger angles of internal friction, up to the maximum allowed by this specification.

If the amount of P-4 material is less than or equal to 60%, two options are available to determine the angle of internal friction. The first method is to perform a fractured faces count, per ASTM 5821, on the R-4 material. If more than 90% of the material is fractured on one face and more than 50% is fractured on two faces, the material meets the specifications and the angle of internal friction can be assumed to be 30 degrees. The second method allows testing all P-1" material, as per AASHTO T-236, with a large shear box. Test results of this second method may allow the use of larger angles of internal friction, up to the maximum allowed by this specification.

Prior to placement of the backfill, obtain and furnish to the engineer a certified report of test results that the backfill material complies with the requirements of this specification. Specify the method used to determine the angle of internal friction. This certified report of test shall be less than 6 months old. Tests will be performed by a certified independent laboratory. In addition, when backfill characteristics and/or sources change, provide a certified report of tests for the new backfill material. Additional certified report of tests (except Angle of Internal Friction test), are also required. These additional backfill tests may be completed at the time of material production or material placement, with concurrence of the engineer. If this additional testing is completed at the time of material production, complete testing for every 2000 cubic yards of backfill or portion thereof. If this additional testing is completed at the time of material placement, complete testing for every 2000 cubic yards of backfill, or portion thereof, used per wall. All certified report of test results shall be less than 6 months old and performed by a certified independent laboratory.

C Construction

C.1 Excavation and Backfill

Excavation will encompass preparing the leveling pad foundation and the area below the reinforcing strips in accordance to section 206 of the standard specifications. The volume of excavation covered is limited to the width of the reinforced mass and to the depth of the leveling pad unless shown or noted otherwise on the plan. At the end of each working day, provide good temporary drainage such that the backfill shall not become contaminated with run-off soil or water if it should rain. Do not stockpile or store materials or large equipment within 10 feet of the back of the wall.

C.2 Compaction Compact all backfill behind the wall as specified in 207.3.6 of the standard specifications. Compact the backfill to 95.0% of maximum dry density as determined by AASHTO T-99, or as modified as follows. If the gradation of the granular backfill is such that the P-200 material is less than 7% and the P-40 is less than 30%, a one-point Proctor test can be conducted in place of the 5-point Proctor. To complete this one-point test, compact the sample at a moisture content of 6%, then compute the actual (as-tested) sample moisture after completion of the test. Use Method B or D, and perform this test without removing oversize particles and without correction for coarse particles, as per AASHTO T224. The one-point as-tested moisture content represents the optimum moisture, and the measured one-point density represents the maximum wet density of the material. From these values, the maximum dry density can be computed.

Insure adequate moisture is present in the backfill during placement and compaction to prevent segregation and to help achieve compaction.

Compaction of backfill within 3 feet of the back face of the wall should be accomplished using lightweight compaction devices. Use of heavy compaction equipment or vehicles should be avoided within 3 feet of the panels.

Place and compact the MSE backfill to the level of the next higher layer of MSE reinforcement before placing the MSE reinforcement or connecting it to the wall facing. The MSE reinforcement shall lay horizontally on the top of the most recently placed and compacted layer of MSE backfill. Bending of MSE reinforcement that result in a kink in the reinforcement shall not be allowed. If skewing of the reinforcement is required due to obstructions in the reinforced fill, the maximum skew angle shall not exceed 15 degrees from the normal position unless a greater angle is shown on the plans. The adequacy of the skewed reinforcement in such a case shall be addressed by supporting calculations.

C.3 Panel Tolerances

As backfill material is placed behind a panel, maintain the panel in its proper inclined position according to the supplier specifications and as approved by the engineer. The supplier shall specify the back batter so that the final position of the wall is vertical. Vertical tolerances and horizontal alignment tolerances shall not exceed ¾-inch when measured along a 10-foot straight edge. The maximum allowable offset in any panel joint shall be ¾-inch. The overall vertical tolerance of the wall (plumbness from top to bottom) shall not exceed ½-inch per 10 feet of wall height. Erect the precast face panels to insure that they are located within 1 inch from the contract plan offset at any location to insure proper wall location at the top of the wall. Provide a ¾-inch joint separation between all adjacent face panels to prevent direct concrete-to-concrete contact. Maintain this gap by the use of bearing pads and/or alignment pins. Failure to meet this tolerance shall cause the engineer to require the contractor to disassemble and re-erect the affected portions of the wall. In addition, imperfect molding, honeycombing, cracking or severe chipping of panels shall be cause of panel rejection.

C4 Quality Management Program

C.4.1 Quality Control Plan

Submit a comprehensive written quality control plan to the engineer at or before the pre-construction meeting. Do not perform MSE wall construction work before the engineer reviews and accepts the plan. Construct the project as the plan provides.

Do not change the quality control plan without the engineer's review and acceptance. Update the plan with changes as they become effective. Provide a current copy of the plan to the engineer and post in the contractor's laboratory as changes are adopted. Insure that the plan provides the following elements:

1. An organizational chart with names, telephone numbers, current certifications and/or titles, and roles and responsibilities of QC personnel.
2. The process used to disseminate QC information and corrective action efforts to the appropriate persons. Include a list of recipients, the communication process that will be used, and action time frames.
3. A list of source locations, section and quarter descriptions, for all aggregate materials requiring QC testing.
4. Descriptions of stockpiling and hauling methods.
5. An outline for resolving a process control problem. Include responsible personnel, required documentation, and appropriate communication steps.
6. Location of the QC laboratory, retained sample storage, and other documentation.
7. A summary of the locations and calculated quantities to be tested under this provision.

C.4.2 Quality Control Personnel

Perform the quality control sampling, testing, and documentation required under this provision using HTCP certified technicians. Have a HTCP Level I Grading Technician, Level I Aggregate Technician, or Assistant Certified Aggregate Technician (ACT) present at the each grading site during all wall backfill placement, compaction, and nuclear testing activities. Have a HTCP Level I Nuclear Density Technician or Assistant Certified Nuclear Density Technician (ACT) perform field density and field moisture content testing.

If an Assistant Certified Technician (ACT) is performing sampling or testing, a certified technician must coordinate and take responsibility for the work an ACT performs. Have a certified technician insure that all sampling and testing is performed correctly, analyze test results, and post resulting data. No more than one ACT can work under a single certified technician.

C.4.3 Equipment

Furnish the necessary equipment and supplies for performing quality control testing. Insure that all testing equipment conforms to the equipment specifications applicable to the required testing methods. The engineer may inspect the measuring and testing devices to confirm both calibration and condition. Calibrate all testing equipment according to the CMM and maintain a calibration record at the laboratory.

Furnish nuclear gauges from the department's approved product list at http://www.atwoodsystems.com/materials. Insure that the gauge manufacturer or an approved calibration service calibrates the gauge the same calendar year it is used on the project. Retain a copy of the calibration certificate with the gauge.

Conform to ASTM D 6938 and CMM 8.15 for density testing and gauge monitoring methods. Perform nuclear gauge measurements using gamma radiation in the backscatter or direct transmission position. Perform each test for 4 minutes of nuclear gauge count time.

Split each Proctor sample and identify so as to provide comparison with the department's test results. Unless the engineer directs otherwise, retain the QC split samples for 14 calendar days and promptly deliver the department's split samples to the department

C.4.4 Quality Control (QC) Testing

Perform compaction testing on the backfill. Conform to CMM 8.15 for testing and gauge monitoring methods. Conduct testing at a minimum frequency of 1 test per 150 cubic yards of backfill, or major portion thereof. A minimum of one test for every lift is required. Deliver documentation of all compaction testing results to the engineer at the time of testing.

Perform 1 gradation test every 750 cubic yards of fill and one 5-point Proctor test (or as modified in C.2) every 2000 cubic yards of fill. Provide the region split samples of both within 72 hours of sampling, at the region laboratory. Test sites shall be selected using ASTM Method D3665. Provide Proctor test results to the engineer within 48 hours of sampling. Provide gradation test results to the engineer within 24 hours of sampling.

C.4.5 Department Testing

C.4.5.1 General

(1) The department will conduct verification testing to validate the quality of the product and independent assurance testing to evaluate the sampling and testing. The department will provide the contractor with a listing of names and telephone numbers of all QV and IA personnel for the project, and provide test results to the contractor within 2 business days after the department obtains the sample.

C.4.5.2 Quality Verification (QV) Testing

(1) The department will have an HTCP technician, or ACT working under a certified technician, perform QV sampling and testing. Department verification testing personnel must meet the same certification level requirements specified in C.4.2 for contractor testing personnel for each test result being verified. The department will notify the contractor before sampling so the contractor can observe QV sampling.

(2) The department will conduct QV tests at the minimum frequency of 30% of the required contractor density, Proctor and gradation tests.

(3) The department will locate density tests and gradation samples randomly, at locations independent of the contractor's QC work. The department will split each Proctor and gradation QV sample, testing half for QV, and retaining the remaining half for 10 business days.

(4) The department will conduct QV Proctor and gradation tests in a separate laboratory and with separate equipment from the contractor's QC tests. The department will use the same methods specified for QC testing.

(5) The department will assess QV results by comparing to the appropriate specification limits. If QV test results conform to this special provision, the department will take no further action. If density QV test results are nonconforming, the area shall be reworked until the density requirements of this special provision are met. If the gradation test results are nonconforming, section 106.5 of the standard specifications will apply. Differing QC and QV nuclear density values of more than 1.5 pcf will be investigated and resolved. QV density tests will be based on the appropriate QC Proctor test results, unless the QV and QC Proctor result difference is greater than 3.0 pcf. Differing QC and QV Proctor values of more than 3.0 pcf will be investigated and resolved.

C.4.5.3 Independent Assurance (IA)

(1) Independence assurance is unbiased testing the department performs to evaluate the department's QV and the contractor's QC sampling and testing, including personnel qualifications, procedures, and equipment. The department will perform an IA review according to the department's independent assurance program. That review may include one or more of the following:

1. Split sample testing.
2. Proficiency sample testing.
3. Witnessing sampling and testing.
4. Test equipment calibration checks.
5. Reviewing required worksheets and control charts.
6. Requesting that testing personnel perform additional sampling and testing.

(2) If the department identifies a deficiency, and after further investigation confirms it, correct that deficiency. If the contractor does not correct or fails to cooperate in resolving identified deficiencies, the engineer may suspend placement until action is taken. Resolve disputes as specified in C.4.5.4.

C.4.5.4 Dispute Resolution

(1) The engineer and contractor should make every effort to avoid conflict. If a dispute between some aspect of the contractor's and the engineer's testing program does occur, seek a solution mutually agreeable to the project personnel. The department and contractor may review the data, examine data reduction and analysis methods, evaluate sampling and testing procedures, and perform additional testing. Use ASTM E 178 to evaluate potential statistically outlying data.

(2) Production test results, and results from other process control testing, may be considered when resolving a dispute.

(3) If the project personnel cannot resolve a dispute, and the dispute affects payment or could result in incorporating non-conforming product or work, the department will use third party testing to resolve the dispute. The department's central office laboratory, or a mutually agreed on independent testing laboratory, will provide this testing. The engineer and contractor will abide by the results of the third party tests. The party in error will pay service charges incurred for testing by an independent laboratory. The department may use third party test results to evaluate the quality of questionable materials and determine the appropriate payment. The department may reject material or otherwise determine the final disposition of nonconforming material as specified in standard spec 106.5.

C.5 Geotechnical Information

Geotechnical data to be used in the design of the wall is given on the wall plan. After completing wall excavation of the entire reinforced soil zone, notify the department and allow the Regional Soils Engineer two working days to review the foundation.

D Measurement
The department will measure Wall Concrete Panel Mechanically Stabilized Earth LRFD in area by the square foot acceptably completed, measured as the vertical area within the pay limits the contract plans show. No other measurement of quantities shall be made in the field. Unless the Engineer directs in writing, a change to the limits indicated on the contract plan, wall area constructed above or below these limits will not be measured for payment.

E Payment
The department will pay for measured quantities at the contract unit price under the following bid item:

ITEM NUMBER	DESCRIPTION	UNIT
SPV.0165.851	Wall Concrete Panel Mechanically Stabilized Earth LRFD/QMP Pilot	SF

Payment is full compensation for supplying a design and shop drawings; preparing the site, including all necessary excavation and disposal of materials; supplying all necessary wall components to produce a functional system including cap and copings; constructing the retaining system including drainage system; providing backfill, backfilling, compacting, developing/completing/documenting the quality management program, performing compaction testing; and for furnishing all tools, labor, equipment, and incidentals necessary to complete the contract work. Parapets, railings, abutment bodies and other items above the wall cap or coping will be paid for separately. Vehicle barrier and its support will be paid separately.

Any required topsoil, fertilizer, seeding or sodding and mulch will be paid for at the contract unit price of topsoil, fertilizer, seeding or sodding and mulch, respectively.

14.13 Pond Edge Seed, Item SPV.0085.100.

*Add the following paragraph after the third paragraph under the heading **B.1 Materials** (Page 159 of 164).*

WisDOT Seed No. 40 in accordance with Section 630 (20% by weight of seed blend). Do not include temporary seed mixtures or nurse crops to the No. 40 blend.

14.14 Salvage & Reinstall Pipe Underdrain and Apron Endwall, Item SPV.0060.005.

A. Description
The work under this item consists of removing, stockpiling and reinstalling existing pipe underdrain and apron endwall at location as shown on the plan. Exercise care to avoid damage to underdrain pipe and endwall.

B. Materials
If underdrain pipe is damaged during construction operation replace underdrain pipe with Pipe Underdrain Unperforated as per 612.2 of standard specification. If apron endwall is damaged during construction operation replace damaged end wall as per section 612.2.

C. Construction
Conform to section 207 for backfilling removed pipe area.

Conform to section 612.3 of standard specification.

D. Measurement
The department will measure Salvage & Reinstall Pipe Underdrain and Endwall as each individual unit acceptably completed.

E Payment
The department will pay for the measured quantity at the contract unit price under the following bid item:

ITEM NUMBER	DESCRIPTION	UNIT
SPV.0060.005	Salvage & Reinstall Pipe Underdrain and Apron Endwall	EACH

Payment is full compensation for removing, stockpiling, and backfilling removed pipe area; for reinstallation of pipe underdrain unperforated; for reinstallation of apron endwall for underdrain reinforced concrete; for excavation and trench excavation; laying, and plowing in pipe; for backfilling; for providing, hauling and placing all materials, including furnishing and installing replacement for damaged materials; and disposing of all surplus material.

14.15 Water for Seeded Areas, Item SPV.0120.001.

A Description
This special provision describes furnishing, hauling and applying water to seeded areas as directed by the engineer, and as hereinafter provided.

B Materials
When watering seeded areas, use clean water, free of impurities or substances that might injure the seed.

C Construction
If rainfall is not sufficient, keep all seeded areas thoroughly moist by watering or sprinkling. Water for 30 days after seed placement or as the engineer directs. Apply water in a manner to preclude washing or erosion. The topsoil shall not be left un-watered for more than 3 days during this 30-day period unless the engineer determines that it is excessively wet and does not require watering. The equivalent of one inch of rainfall per week shall be considered the minimum.

D Measurement
The department will measure Water for Seeded Areas by volume by the thousand gallon units (MGAL), acceptably completed. The department will determine volume by engineer-approved meters or from tanks of known capacity.

E Payment
The department will pay for measured quantities at the contract unit price under the following bid item:

ITEM NUMBER	DESCRIPTION	UNIT
SPV.0120.01	Water for Seeded Areas	MGAL

Payment is full compensation for furnishing, hauling, and applying the water."
(NER12-1010)

16.2 Sign Bridge Cantilevered (structure), Item 641.1200; Sign Bridge (structure), Item 641.6600

A Description

(1) This section describes providing steel sign bridges and steel overhead sign supports and supersedes standard spec 641 requirements for the specified bid items.

B Materials

B.1 High-Strength Bolt/Nut/Washer Assemblies

(1) Furnish zinc-coated bolt/nut/washer assemblies consisting of high-strength type 1 galvanized bolts conforming to ASTM A325, type 1 galvanized grade DH or DH3 nuts conforming to ASTM A563, and galvanized flat washers conforming to ASTM F436. Also conform to the following:

- Use SAE hardened washers for bolt diameters greater than 1 1/8 inches.
- Ensure that the supplier pre-assembles each bolt/nut/washer assembly before shipping.
- Ensure that bolt/nut/washer assemblies are accompanied by a certified report of test or analysis giving the results of the supplier's rotational-capacity testing. No field rotational capacity testing is required.
- Ensure that bolt/nut/washer assemblies are shipped in sealed and labeled containers or pre-assembled within a component of the structure.
- Furnish 3 or more additional bolt/nut/washer assemblies of each rotational-capacity lot for pre-installation testing.
- Submit 2 or more additional bolts and 3 or more additional nuts and washers from each lot and heat for department mechanical testing. The contractor need not submit components from a lot and heat the department previously approved.

(2) Hot-dip galvanize according to ASTM A153 supplemented by ASTM F2329 or mechanically zinc-coat according to ASTM B695, class 50. Remove excess hot-dip zinc coating on threads by centrifuging or air blasting immediately after withdrawal. Do not flame-chase. Do not mix hot-dipped and mechanically coated components within a bolt/nut/washer assembly.

(3) Ensure that the manufacturer provides identification marks for high-strength bolts and nuts according to ASTM A325.

B.1.1 High-Strength Bolts

(1) The required bolt length is the grip, total thickness of the connected material, plus the tabulated amount for each bolt size as follows:

BOLT SIZE	AMOUNT ADDED TO THE GRIP
5/8-inch	1 1/16 inches
3/4-inch	1 3/16 inches
7/8-inch	1 5/16 inches
1-inch	1 9/16 inches
1 1/8 to 1 1/4-inch	1 13/16 inches
1 3/8 to 1 1/2-inch	2 1/16 inches

(2) The above values are generalized, with allowance for manufacturing tolerances, to provide for a washer and using a heavy nut, with adequate stick-through at the end of the bolt. For each required beveled washer, add 5/16 inch; for any additional washer, add 3/16 inch; and for a load-indicating washer, add 1/8 inch. Adjust the length determined from the above table increment and allowances for additional washers to the next 1/4 inch length increment for bolts up to 5 inches length and to the next 1/2 inch length increment for lengths over 5 inches.

(3) The full thread may extend into the grip not more than 3/8 inch for lengths of 5 inches or less, and not more than 5/8 inch for lengths over 5 inches.

(4) Ensure that bolts conform to the following:

HARDNESS NUMBER		
BOLT SIZE	BRINELL min / max	ROCKWELL C min / max
1/2 through 1-inch	253 / 319	25 / 33
greater than 1-inch	223 / 286	19 / 30

B.1.2 High-Strength Nuts

(1) Ensure that the supplier lubricates zinc coated nuts with a lubricant containing dye that contrasts with the color of the zinc coating according to ASTM A563 supplementary requirements S1 and S2.

B.1.3 High-Strength Flat Washers

(1) Install bolts with a washer under the nut or bolt head, whichever is used in tightening. If clearance is necessary, the contractor may clip washers on one side to a point not closer than 7/8 of the bolt diameter from center of washer.

B.1.4 Direct Tension Indicating Washers

(1) Furnish zinc-coated direct tension indicating (DTI) washers conforming to ASTM F959 type 325. Ensure that DTIs have identifying marks applied by the manufacturer. Provide the engineer with 2 copies of the DTI manufacturer's instructions showing acceptable installation configurations. Provide 3 or more additional DTI washers as required for pre-installation testing. Also provide the engineer with at least two 0.005-inch metal feeler gauges.

B.1.5 Testing and Reporting

(1) Ensure that supplier-performed rotational capacity testing conforms to Report No. FHWA SA-91-031 "High-Strength Bolts for Bridges". Furnish 2 copies of a certified report of test or analysis indicating the results of required manufacturer/supplier tests.

B.2 Anchor Bolts

(1) Furnish anchor bolts conforming to ASTM F1554, grade 55 and Supplementary Specification S4, ASTM A563A heavy hex nuts, and ASTM F436 washers all hot-dip galvanized according to ASTM A153 supplemented by ASTM F2329. Over-tap galvanized nuts according to ASTM F2329.

(2) Use only nuts and anchor bolts manufactured with sufficient clearance to allow the nuts to run freely on the bolts after coating the threads and nuts with a wax-based lubricant.

B.3 Stainless Steel Bolts and Nuts

(1) Provide stainless steel set screws, bolts, nuts, and washers for hardware and U bolts as specified for bolts and nuts in standard spec 513.2.2.5.

B.4 Certification

(1) Submit a certified report of test or analysis to the engineer for columns, truss members, pipes, anchor bolts, high-strength bolts, nuts, and washers, and structural sections. The engineer must approve the material before the contractor may install in the work.

(2) The engineer may retest materials delivered to the job site; furnish the specimens for this testing at no expense to the department.

B.5 Steel Sign Bridges

(1) Furnish materials conforming to the following:

Structural Steel and Miscellaneous Metals 506.2

(2) If using steel pipe for chords and columns for sign bridges, conform to the American Petroleum Institute's Specification for Line Pipe API-5L and the grade the plans show. For all other pipe used for sign bridges, conform to ASTM A53, grade B of type E or S. If using structural steel for columns and in trusses for sign bridges, conform to ASTM A709 grade 36.

(3) Furnish sign bridge trusses, columns, and steel accessories zinc coated according to ASTM A123, the zinc coating must withstand 8 one-minute dips in the Preece test solution, ASTM A239.

B.6 Steel Overhead Sign Supports

(1) Provide commercially fabricated overhead sign supports conforming to AASHTO design and fabrication standards for structural supports for highway signs, luminaires, and traffic signals. Use a design life of 50 years with a wind importance factor of 1.00. Design to withstand a 3 second gust wind speed of 90 mph. Do not use the methods of appendix C of those AASHTO standards.

(2) Design structures, listed as applicable structure types in the AASHTO standards, to the fatigue category criteria as follows:

1. Structures carrying variable message signs:
    - Category I criteria for structures over all roadway types.

2. Structures carrying type II or III signs:
    - Category I criteria for structures used over highways and free flow ramps.
    - Category II criteria for structures with arms greater than 30 feet used over local roads and city streets.
    - Category III criteria for structures with arms 30 feet or less used over local roads and city streets.

(3) Use the posted speed limit of the roadway beneath the structure for truck-induced gusts.

(4) Submit shop drawings identified by structure number, design computations, and material specifications, to the engineer before erecting sign supports. Provide tightening procedures for mast arm or luminaire arm to pole shaft connections on the shop drawings. Have a professional engineer registered in the state of Wisconsin sign, seal, and date the shop drawings and certify that the design conforms to AASHTO standards and the contract.

(5) Provide steel pole shafts and mast arms zinc coated according to ASTM A123. Provide tapered pole and arm shafts with a minimum taper of 0.14 inch per foot for single-member vertical and single-member horizontal structure components.

C Construction

C.1 General

C.1.1 Methods

(1) Use construction methods for this work, including fabrication, inspection, erection, mill test reports, and shop drawings, conforming to standard spec 506.3. Construct concrete footings conforming to standard spec 636. Cure exposed portions of concrete footings as specified in standard spec 502.3.8.1. Wait until the concrete has attained 3500 psi compressive strength or 7 equivalent days as specified in standard spec 502.3.10 before erecting any portion of the structure on the footing.

C.1.2 High-Strength Bolts

C.1.2.1 Handling and Storage

(1) Store bolts/nut/washer assemblies and DTI washers in closed containers in a protected shelter to protect them from dirt and moisture until used. Maintain fastener system components as

nearly as possible in the as-manufactured condition until installed. Remove from storage only as needed and promptly return unused components to storage.

C.1.2.2 Pre-installation Testing

(1) Notify the engineer before performing the required field pre-installation testing.

(2) Lubricate high-strength bolt threads with a wax-based lubricant before testing. Test bolt/nut/washer assemblies with DTI washers in all the configurations used for installation.

(3) Perform pre-installation testing in the field conforming to the procedures enumerated in department form DT2322 for bolt/nut/washer assemblies of each rotational-capacity lot with DTI washers in each installation configuration. Provide the engineer with the test results by submitting 2 copies of department form DT2322.

C.1.2.3 Bolt Installation

(1) Do not begin bolt installation without the engineer's approval.

(2) Lubricate high-strength bolt threads with a wax-based lubricant before installation.

(3) Tension high-strength bolts using direct tension indicating (DTI) washers. Install the DTI on the bolt with the protrusions facing away from the connected materials. Install bolt/nut/washer assemblies with DTI washers in the same configuration used for pre-installation testing.

(4) Tighten conforming to department form DT2322 to provide the correct installation tension. During the operation, ensure no rotation of the part not turned by the wrench. Snug systematically from the most rigid part of the connection to the free edges. Repeat until the full connection is in a snug condition and the faying surfaces are in firm contact. Systematically tighten the connection required number of refusals is achieved. If the gaps on the DTI washer are completely closed, discontinue tightening.

C.1.2.4 Contractor QC Testing

(1) In addition to contractor QC testing the engineer may verify bolt installation by periodically testing with a feeler gauge.

(2) Use a 0.005-inch metal feeler gauge to perform QC testing for each completed bolted connection in the presence of the engineer. Test a minimum of 10 percent of the bolts, but not less than 2 bolts, selected randomly in each connection. After observing at the initial QC testing frequency, the engineer may decide to observe QC testing at a reduced frequency.

(3) If the number of refusals required on department form DT2114 is achieved, the engineer will accept the connection as properly tightened. If for any bolt the required number of refusals is not achieved, tighten all bolts in the connection.

C.1.3 Anchor Assembly

(1) Install structures on anchor bolts conforming to the procedures enumerated in department form DT2321. Complete department form DT2321 for each structure. Indicate the parties responsible for the installation and submit the form to the engineer for inclusion in the permanent project record.

C.1.4 Sign Installation

(1) Install permanent signs as soon as support structures are erected. If permanent signing is not available, install sign-blanks to control vibration. Fasten to the supporting structure conforming to standard spec 637.3.3.3.

(2) For overhead sign supports, ensure that sign-blanks are the same sizes and at the same locations as the permanent signs.

(3) For sign bridges, attach sign-blanks to a minimum of 1/4 the truss length near its center. Use sign-blanks that are at a minimum 24 inches larger than the truss depth and project an equal distance beyond the top and bottom chord members.

(4) Install structure identification plaques on overhead sign supports and sign bridges in the locations the plan details show.

C.2 Steel Sign Bridges

(1) Perform all shop welding for steel sign bridges and supports as the plans show and conforming to AWS D 1.1, Structural Welding Code - Steel.

(2) Do not weld in the field without the engineer's written approval. The engineer will only allow field welding for repairs in noncritical locations and when a department-approved individual competent to perform inspections is present during the welding. Perform field welding using personnel qualified under AWS D 1.5, Bridge Welding Code.

(3) Inspect all welds visually, additionally, if the engineer determines, test all butt welds in main, stress-carrying members subject to tension or stress reversal by radiographic or ultrasonic methods over the entire length of the weld. Test other butt welds in these members by the same methods, except the engineer will determine the length of weld to test. Use either the dye penetrant method, or the magnetic particle method to test the fillet welds connecting columns to bases and main chord members, including the associated flanges, gussets, or main load carrying brackets or members, and on fillet welds connecting flanges to the main truss chord members. Perform the dye penetrant test according to according to ASTM E165, visual dye solvent removable. Perform the magnetic particle method according to the applicable requirements of ASTM E709. Furnish all materials, equipment, and personnel to perform this inspection at no expense to the department.

(4) Blast clean and then zinc coat the fabricated sign bridge trusses, columns, and their steel accessories after completing all cutting, punching, drilling, and welding.

(5) After zinc coating, assemble the individual members making up the truss sections, unless fabricated and zinc coated in one piece in the shop, adjust to the proper shape and alignment, and tighten the high-strength bolts to the required tension. Then, assemble the truss sections that make up any one sign bridge in the shop, and adjust to proper alignment and camber as the plans show. Matchmark all truss sections and shims before disassembling for shipment.

(6) Assemble the sections making up the truss, together as a single unit, before attaching to the columns.

(7) Protect zinc coated members from damage to the zinc coating during transportation, storage, and erection. Paint areas of damaged zinc coating with 2 coats of zinc dust/zinc oxide paint. Clean damaged and adjacent areas by sanding, scraping, chipping, or wire brushing. Apply a profile to the bare metal surface using a needle gun before painting. For areas of damage larger than 10 square inches metalize according to AASHTO M36 or, for field repairs, using an engineer-approved high-temperature application of zinc powder and flux in paste or stick form.

C.3 Steel Overhead Sign Supports

(1) Under the Overhead Sign Support bid item, furnish and erect commercially designed sign supports, fabricated from steel, consisting of pole shafts, mast arms, anchor bolts, hardware, concrete supports and all other items necessary to complete the work.

(2) Construct the sign supports according to the manufacturer’s instructions.

D Measurement

(1) The department will measure the Sign Bridge Single Pole Sign Support One Sign, Sign Bridge Single Pole Sign Support Two Signs, Sign Bridge Cantilevered, Sign Bridge Structure Mounted, and Sign Bridge bid items as a single lump sum unit for each sign bridge acceptably completed.

(2) The department will measure the Overhead Sign Support bid items as a single lump sum unit for each overhead sign support acceptably completed.

E Payment

(1) The department will pay for measured quantities at the contract unit price under the following bid items:

ITEM NUMBER	DESCRIPTION	UNIT
641.1200	Sign Bridge Cantilevered (structure)	LS
641.6600	Sign Bridge (structure)	LS

(2) Payment for the Sign Bridge Single Pole Sign Support One Sign, Sign Bridge Single Pole Sign Support Two Signs, Sign Bridge Cantilevered, Sign Bridge Structure Mounted, and Sign Bridge bid items is full compensation for providing all materials; for anchor bolts; for high-strength bolt/nut/washer assemblies and DTI washers including those required for testing; for dampeners if required in the structure plans; for fabricating, including all cutting, preparing, welding, and zinc coating; for transporting and erecting; for structure identification plaques; and for sign blanks if required. Concrete footings are paid for separately as specified in standard spec 636.5. Signs and the sign mounting system are paid for separately as specified in standard spec 637.5.

(3) Payment for the Overhead Sign Support bid items is full compensation for designing the sign support structure; for excavating; for providing all materials, including anchor bolts, pole shafts, mast arms, required reinforcing steel, and concrete; for high-strength bolt/nut/washer assemblies and DTI washers including those required for testing; for fabricating, including all cutting, preparing, welding, and zinc coating; for placing and curing concrete footings; for transporting and erecting; for structure identification plaques; and for sign blanks if required. Sign lighting, when required, is paid for separately as specified in standard spec 659.5. Signs and the sign mounting system are paid for separately as specified in standard spec 637.5.

Schedule of Items
Attached, dated May 5, 2014, are the revised Schedule of Items Pages 1 – 24.

Plan Sheets
The following 8½ x 11-inch sheets are attached and made part of the plans for this proposal:
Revised: 3, 36-37, 41, 47, 53, 56, 61, 66, 77-79, 93, 102, 104, 119, 122, 125, 127, 131-132, 138, 143, 149, 155-156, 161, 166, 172-174, 184-192, 194-195, 199-202, 209, 211, 348-349, 367, 404, 411, 441, 472, 481, 511-515 and 626-630.
Added: 43A, 104A, 149A and 630A.

END OF ADDENDUM

2

OTHER AGENCIES

DNR AREA LIAISON

JAY SCHIEFELBEIN
DEPARTMENT OF NATURAL RESOURCES
2984 SHAWANO AVENUE
GREEN BAY, WI 54313
(920) 662-5407
JEREMIAH.SCHIEFELBEIN@WISCONSIN.GOV

US ARMY CORP OF ENGINEERS

ANN NYE
OLD FORT SQUARE
211 N. BROADWAY, STE 221
GREEN BAY, WI 54303
(920) 448-2824
ANN.M.NYE@USACE.ARMY.MIL

COUNTY SURVEYOR OR SURVEYS CONTACT PERSON

DIANE CULVER
WINNEBAGO COUNTY PLANNING AND ZONING DEPT
PO BOX 2808
OSHKOSH, WI 54903
920-232-3335
DCULVER@CO.WINNEBAGO.WI.US

WINNEBAGO COUNTY HIGHWAY COMMISSIONER

ERNIE WINTERS
901 WEST COUNTY ROAD Y
P.O. BOX 2764
OSHKOSH, WI 54903
(920) 232-1700

DESIGN CONTACTS

SCOTT EBEL
WISDOT - NE REGION
1940 WEST MASON STREET
GREEN BAY, WI 54303
920-492-2240
SCOTT.EBEL@DOT.WI.GOV

JUSTIN ARNDT
KAPUR & ASSOCIATES, INC.
7711 N. PORT WASHINGTON RD.
MILWAUKEE, WI 53217
414-751-7233
JARNDT@KAPUR-ASSOC.COM

WISCONSIN CENTRAL LTD CONTACTS

RAILROAD FLAGGING CONTACT
MARY ELLEN CARMODY
2800 LIVERNOIS ROAD, SUITE 330
TROY, MI 48083
OFFICE: (248) 740-6227
FAX: (248) 740-6036
MARYELLEN.CARMODY@CN.CA

MAIN RAILROAD CONTACT
JACKIE MACEWICZ
MANAGER PUBLIC WORKS
1625 DEPOT STREET
STEVENS POINT, WI 54481
OFFICE: (715) 345-2503
FAX: (715) 345-2507
JACKIE.MACEWICZ@CN.CA

24 HOUR EMERGENCY RAILROAD SIGNAL

1-800-616-3432

CALL BEFORE YOU DIG

WISCONSIN CENTRAL LTD IS NOT PART OF DIGGERS HOTLINE.
CALL CHRISTINE GRZESIAK, (715) 345-2506, WHEN DIGGING ON RAILROAD R/W

ORDER OF SECTION 2 DETAIL SHEETS

GENERAL NOTES
UTILITY CONTACTS
PROJECT OVERVIEW
TYPICAL SECTIONS
CONSTRUCTION DETAILS
REMOVAL PLAN
PLAN DETAIL
PAVING GRADES
WETLAND DETAILS
INVASIVE SPECIES
EROSION CONTROL
POND DETAILS
STORM SEWER PLAN
PERMANENT SIGNING PLAN
LIGHTING PLAN
STAGE CONSTRUCTION
TRAFFIC CONTROL
ALIGNMENT PLAN

UTILITY CONTACTS

Addendum No. 1
ID 1517-07-72
Revised Sheet 3
May 5, 2014

2

AT&T LEGACY
MR. WILLIAM KOENIG
C/O JMC ENGINEERS & ASSOCIATES, INC.
P.O. BOX 244
LAKE MILLS, WI 53551
MOBILE: (608) 628-0575
JMC140@FRONTIER.COM

~~**AT&T TCG**~~
~~MR. DON DIETSCH~~
~~C/O NORTHWIND TECHNICAL SERVICES LLC~~
~~383 WILLAMSTOWNE STE B~~
~~DELAFIELD, WI 53018~~
~~(262) 646-5602~~
~~MOBILE: (414) 651-2862~~
~~FAX: (262) 646-5603~~
~~D.DIETSCH@NORTHWINDTECH.COM~~

AT&T WISCONSIN
MR. GARY LAABS
221 W. WASHINGTON ST 4TH FLOOR
APPLETON, WI 54911
(920) 735-3063
GL1784@ATT.COM

MENASHA UTILITIES - ELECTRIC & WATER
MR. GREG SHULL
321 MILWAUKEE ST
P.O. BOX 340
MENASHA, WI 54952
(920) 967-3422
GSHULL@WPPIENERGY.ORG

TOWN OF MENASHA - SANITARY SEWER
MR. MARK SCHMITT
UTILITY DISTRICT
2340 AMERICAN DR
NEENAH, WI 54956
(920) 720-7100
MOBILE: (920) 419-3874
MSCHMITT@TOWN-MENASHA.COM

TOWN OF MENASHA - WATER
MR. JEFF ROTH
UTILITY DISTRICT
2340 AMERICAN DR
NEENAH, WI 54956
(920) 720-7175
JEFFR@TOWN-MENASHA.COM

SPRINT
MR. JAMES BURTON
C/O ERICSSON INC.
400 W GRAND AVE
ELMHURST, IL 60126
(847) 737-1273
MOBILE: (708) 955-6659
JAMES.BURTON@ERICSSON.COM

~~**TDS METROCOM**~~
~~MR. STEVE JAKUBIEC~~
~~10 COLLEGE AVE STE 218A~~
~~APPLETON, WI 54911~~
~~(920) 882-4166~~
~~MOBILE: (920) 562-7221~~
~~STEVE.JAKUBIEC@TDSTELECOM.COM~~

TIME WARNER CABLE
MR. VINCE ALBIN
3520 DESTINATION DR
APPLETON, WI 54915
(920) 831-9249
MOBILE: (920) 378-0444
VINCE.ALBIN@TWCABLE.COM

~~**TRANSCANADA**~~
~~MR. ROBERT BIBELHAUSEN~~
~~ANR PIPELINE COMPANY~~
~~N 4956 OAKCREST DR~~
~~BONDUEL, WI 54107~~
~~(715) 758-3343~~
~~MOBILE: (715) 460-4001~~
~~ROBERT_BIBELHAUSEN@TRANSCANADA.COM~~

WE ENERGIES - ELECTRIC
MR. KEN VAN OSS
P.O. BOX 1699
APPLETON, WI 54912
(920) 380-3318
KENNETH.VAN-OSS@WE-ENERGIES.COM

WE ENERGIES - GAS
MR. CODY BECKMANN
800 SOUTH LYNNDALE DRIVE
APPLETON, WI 54914
(920) 380-3422
MOBILE: (920) 428-1038
CODY.BECKMANN@WE-ENERGIES.COM

TO OBTAIN LOCATION OF PARTICIPANTS' UNDERGROUND FACILITIES BEFORE YOU DIG IN WISCONSIN

WIS. STATUTE 182.0175 (1974) REQUIRES MIN. OF 3 WORK DAYS NOTICE BEFORE YOU EXCAVATE.

DIGGERS HOTLINE
Dial 811 or (800) 242-8511
www.DiggersHotline.com

2

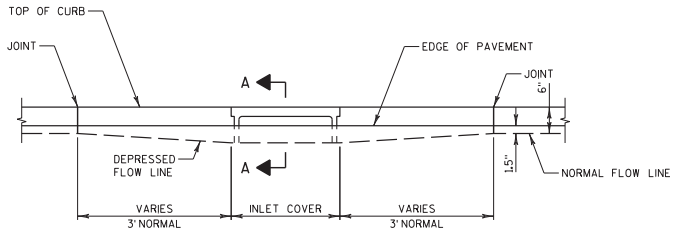

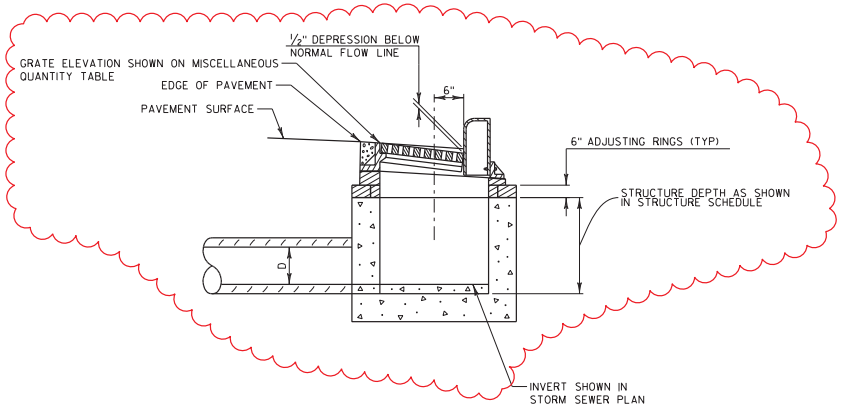

SECTION A-A

DETAIL OF CURB AND GUTTER AT INLETS

NOTE

1) LOCATION OF STRUCTURE MAY BE ADJUSTED TO FIT FIELD CONDITIONS.

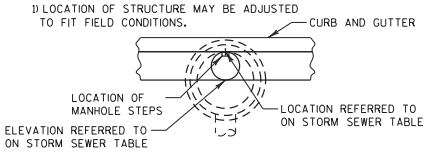

MANHOLE OR CIRCULAR INLET IN CURB AND GUTTER

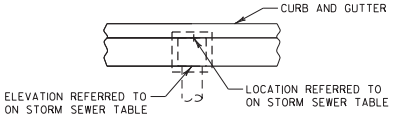

INLET IN CURB AND GUTTER

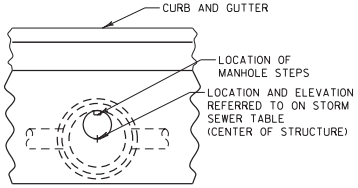

MANHOLE NOT IN CURB AND GUTTER

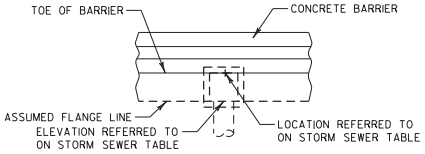

INLET ADJACENT TO CONCRETE BARRIER

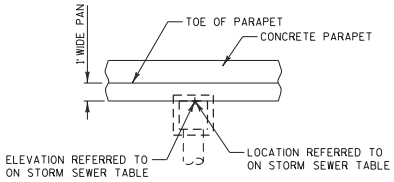

INLET ADJACENT TO RETAINING WALL PARAPET

STRUCTURE LOCATION DETAIL

Addendum No. 1
ID 1517-07-72
Revised Sheet 36
May 5, 2014

2

PROJECT NO: 1517-07-72	HWY: USH 10	COUNTY: WINNEBAGO	CONSTRUCTION DETAILS	SHEET 36	E

2

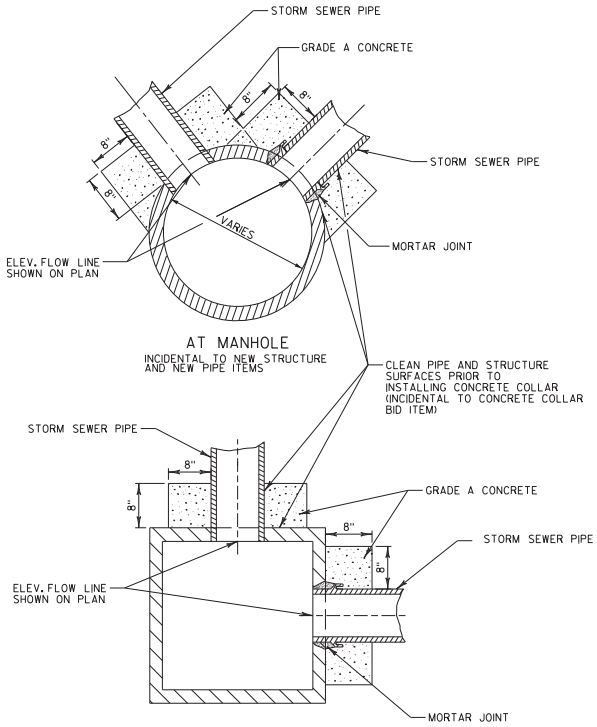

NOTE

CONCRETE COLLAR TO BE PAID AS A BID ITEM WHEN:

A) CONNECTING AN EXISTING PIPE TO A NEW STRUCTURE AND
B) CONNECTING AN EXISTING STRUCTURE TO A NEW PIPE

CONCRETE COLLAR DETAIL

Addendum No. 1
ID 1517-07-72
Revised Sheet 37
May 5, 2014

NOTE:

1) INSTALL COVER PLATE TO REST FLAT UPON THE EXISTING STRUCTURE. COVER PLATE SHOULD EXTEND OUTSIDE EDGE OF THE EXISTING MASONRY.

2) THE FOLLOWING ITEMS ARE INCIDENTAL TO ITEM COVER PLATE LEFT IN PLACE:
   A. FURNISH AND INSTALL COVER PLATE
   B. BACKFILL USING BASE AGGREGATE DENSE 1 1/4"

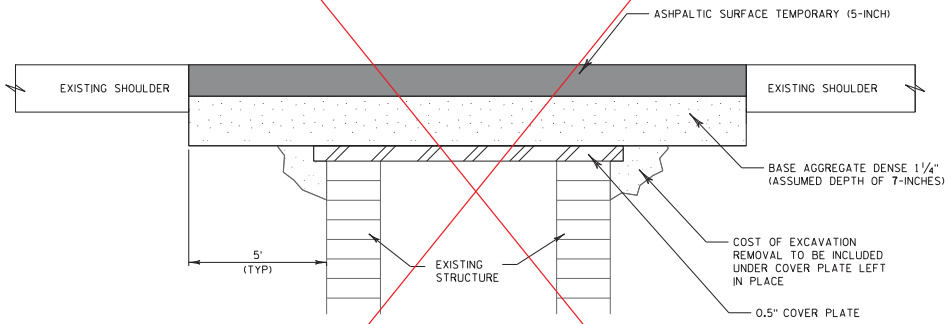

REMOVING INLET COVER AND CASTING

STATION 182EB+80, RT

2

PROJECT NO: 1517-07-72	HWY: USH 10	COUNTY: WINNEBAGO	CONSTRUCTION DETAILS	SHEET 37	E

2

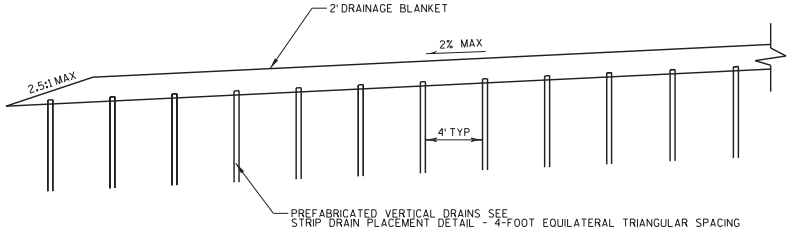

DRAINAGE BLANKET DETAIL - 4-FOOT EQUILATERAL TRIANGULAR SPACING

NOT TO SCALE

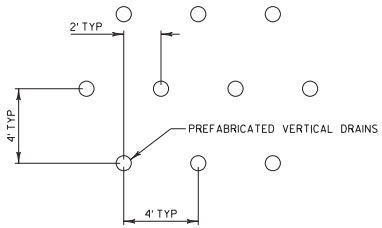

PREFABRICATED VERTICAL DRAINS PLACEMENT DETAIL - 4-FOOT EQUILATERAL TRIANGULAR SPACING

NOT TO SCALE
STA 132FWN+00 TO STA 135FWN+25

2

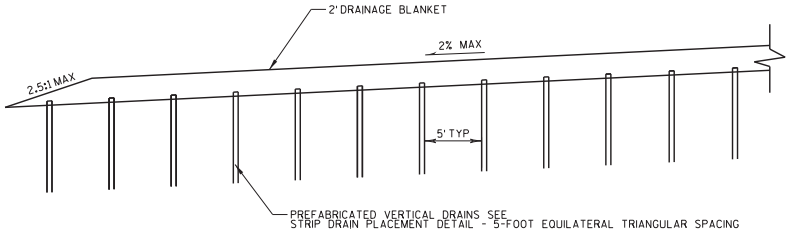

DRAINAGE BLANKET DETAIL - 5-FOOT EQUILATERAL TRIANGULAR SPACING

NOT TO SCALE

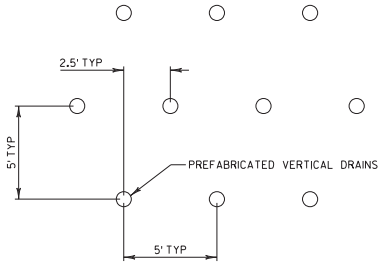

PREFABRICATED VERTICAL DRAINS PLACEMENT DETAIL - 5-FOOT EQUILATERAL TRIANGULAR SPACING

NOT TO SCALE
STA 120WB+00 TO STA 128WB+13
STA 126WB+75 TO STA 133WB+00
STA 122FEN+50 TO STA 125FEN+90
STA 1324FNE+50 TO STA 1331FNE+25
STA 136FEN+66 TO STA 140FEN+00
STA 1335FNE+35 TO STA STA 1342FNE+84
STA 1365NB+02.79 TO STA 1365NB+50.00

Addendum No. 1
ID 1517-07-72
Revised Sheet 41
May 5, 2014

PROJECT NO: 1517-07-72	HWY: USH 10	COUNTY: WINNEBAGO	CONSTRUCTION DETAILS	SHEET 41	E

2

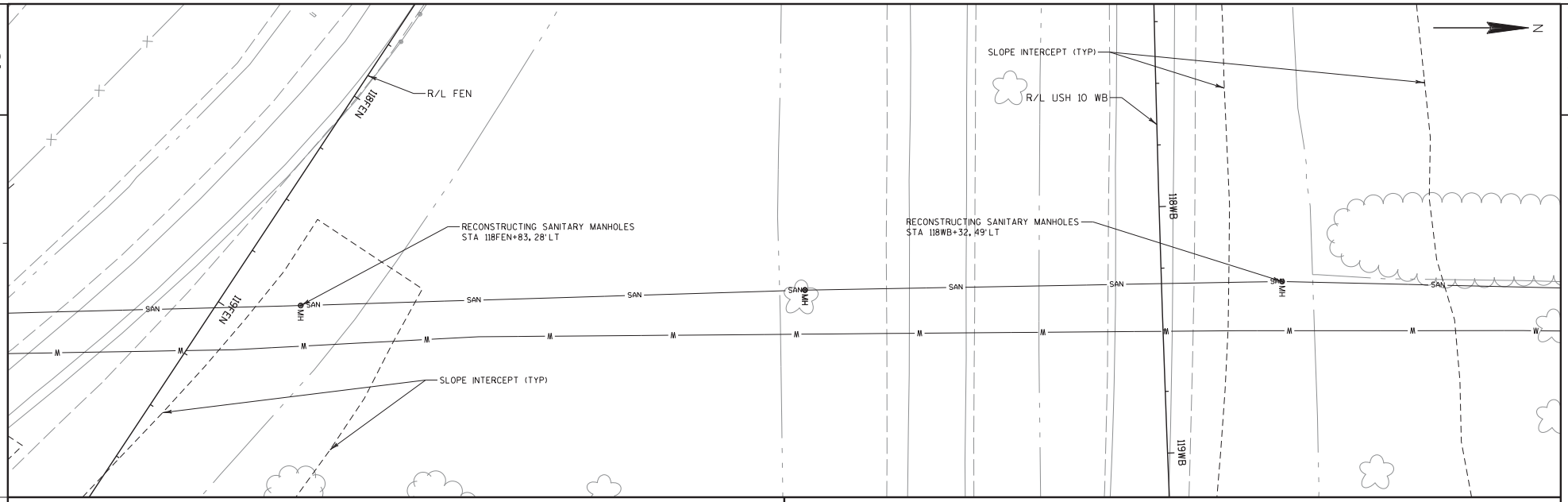

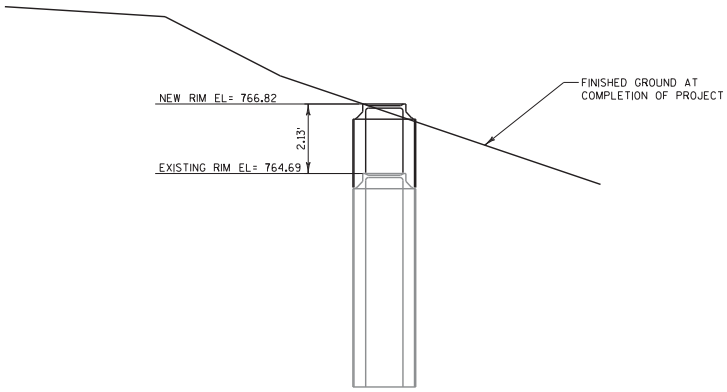

RECONSTRUCTING SANITARY MANHOLES

STA 118FEN+83, 28'LT

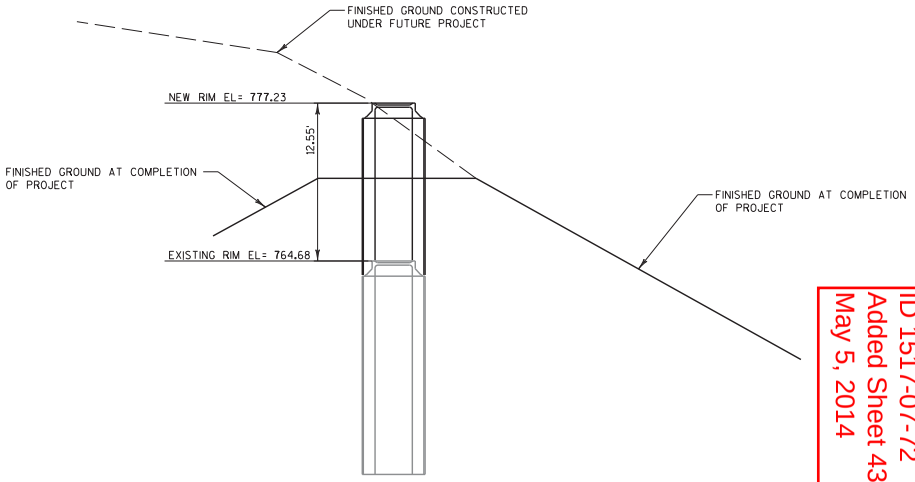

RECONSTRUCTING SANITARY MANHOLES

STA 118WB+32, 49'LT

Addendum No. 1
ID 1517-07-72
Added Sheet 43A
May 5, 2014

PROJECT NO: 1517-07-72	HWY: USH 10	COUNTY: WINNEBAGO	CONSTRUCTION DETAILS	SHEET 43A	E

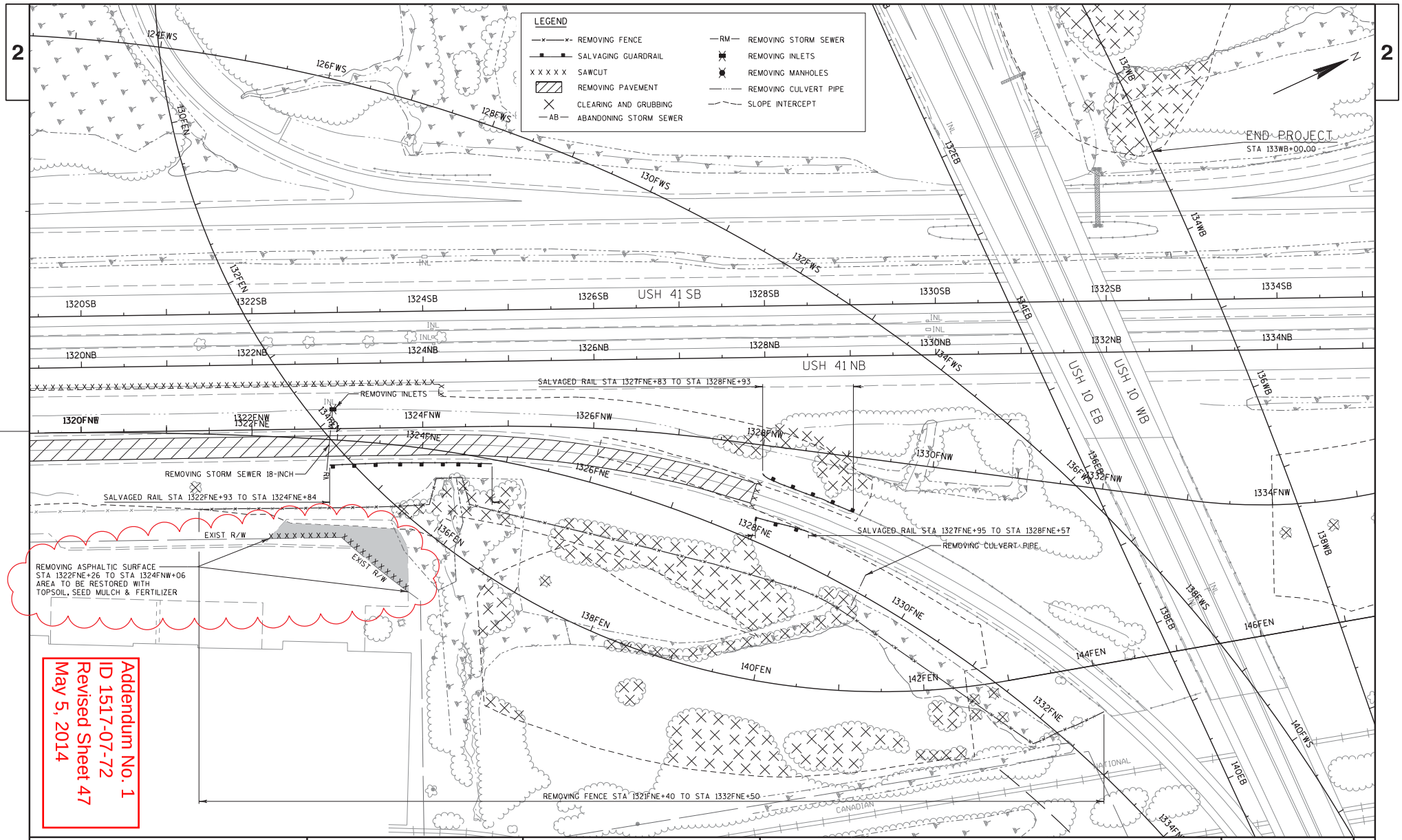

PROJECT NO: 1517-07-72	HWY: USH 10	COUNTY: WINNEBAGO	REMOVAL PLANS: SHEET 2	SHEET 47	E

FILE NAME : S:\DOT\DOT_NE\120012-Tri County Freeway\1517-07-72\DGN_Files\Plansheets\021202_rm.dgn PLOT DATE : 4/23/2014 PLOT BY : wally_w PLOT NAME : PLOT SCALE : 1:100

WISDOT/CADDS SHEET 42

2

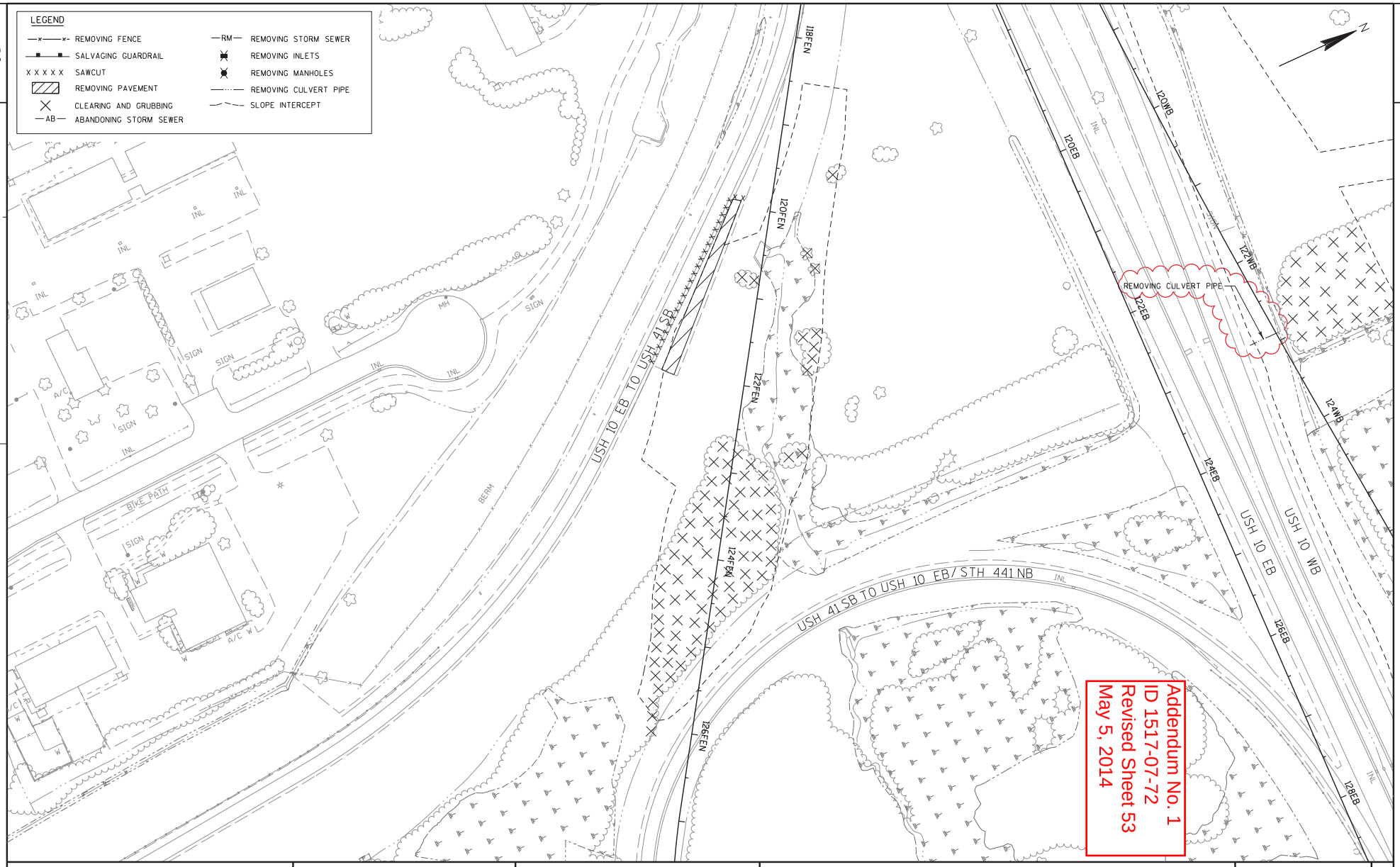

Addendum No. 1
ID 1517-07-72
Revised Sheet 53
May 5, 2014

2

PROJECT NO: 1517-07-72	HWY: USH 10	COUNTY: WINNEBAGO	REMOVAL PLANS: SHEET 8	SHEET 53	E

FILE NAME : S:\DOT\DOT_NE\120012-Tri County Freeway\1517-07-72\DGN_Files\Plansheets\021208_rm.dgn PLOT DATE : 4/24/2014 PLOT BY : wally_w PLOT NAME : PLOT SCALE : 1:100 WISDOT/CADDS SHEET 42

2

LAKESHORE DRIVE

WETLAND BOUNDARY (TYP)

NOISE WALL PANEL REMOVAL IS INCIDENTAL TO CULVERT PIPE TEMPORARY 12-INCH (IF REMOVAL IS NECESSARY)

176EB

178EB

180EB

182EB

184EB

186EB

188EB

190EB

EB+12.46
26.65' LT

R/L USH 10 EB/STH 441 NB

REMOVING STORM SEWER 30-INCH

EB+10.74
54.77' RT

REMOVING FENCE
STA 180EB+11 TO STA 183EB+87

REMOVING STORM SEWER 18-INCH

EB+80.24
43.59' RT

EB+87.14
110.59' RT

USH 10 WB / STH 441 SB

USH 10 EB / STH 441 NB

TAYCO STREET

N

REMOVAL LEGEND

CLEARING AND GRUBBING (STA)

—x— REMOVING FENCE

—RM— REMOVING STORM SEWER

— — — SLOPE INTERCEPT

Addendum No. 1
ID 1517-07-72
Revised Sheet 56
May 5, 2014

2

PROJECT NO:1517-07-72	HWY:USH 10	COUNTY:WINNEBAGO	REMOVAL PLAN	SHEET 56	E

FILE NAME : \\milw00\ingrproj\56537\1517-07-71_72_73_KA_System\t1\cds\021101_rm.dgn PLOT DATE : 4/16/2014 5:31:09 PM PLOT BY : nspitzer PLOT NAME : PLOT SCALE : 100:1

WISDOT/CADDS SHEET 42

2

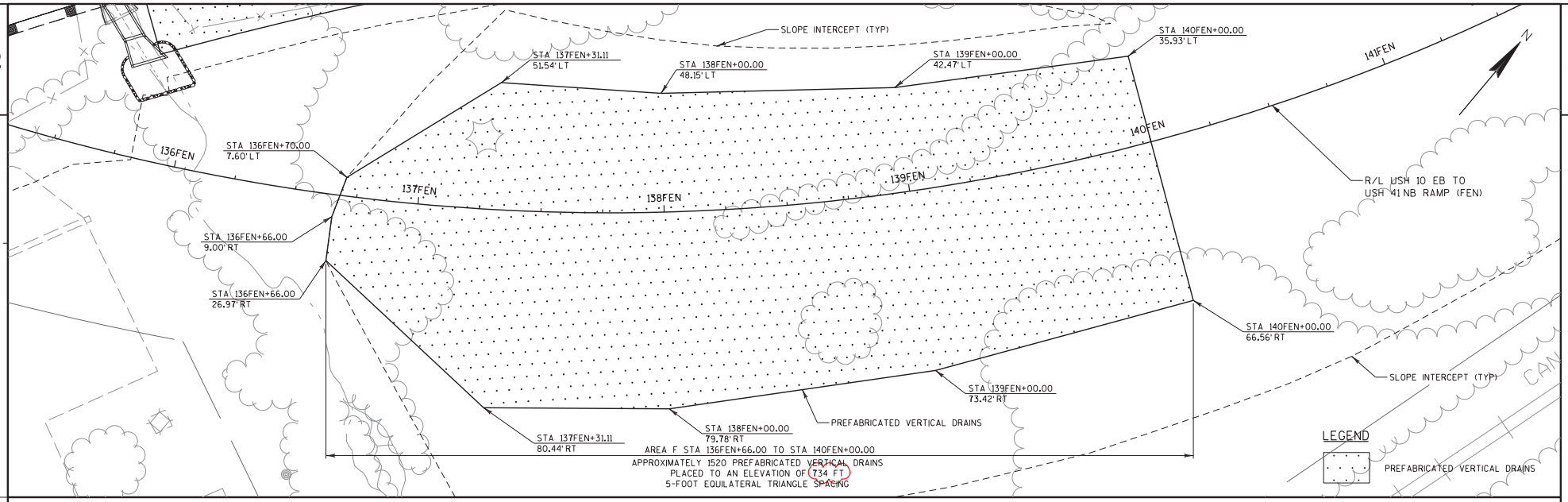

2

Addendum No. 1
ID 1517-07-72
Revised Sheet 61
May 5, 2014

PROJECT NO: 1517-07-72	HWY: USH 10	COUNTY: WINNEBAGO	PLAN DETAILS: PREFABRICATED VERTICAL DRAINS	SHEET 61	E

FILE NAME : S:\DOT\DOT_NE\120012-Tri County Freeway\1517-07-72\DGN_Files\Plansheets\021224_pd.dgn PLOT DATE : 5/1/2014 PLOT BY : wally_w PLOT NAME : PLOT SCALE : 1:40

WISDOT/CADDS SHEET 42

Addendum No. 1
ID 1517-07-72
Revised Sheet 66
May 5, 2014

2

LEGEND

PREFABRICATED VERTICAL DRAINS

N

MENASHA CREEK

A/C

AREA I STA 1365NB+02.79 TO STA 1365NB+50.00 (STA 1365SB+00 = STA 1365NB+00)
APPROXIMATELY 35 PREFABRICATED VERTICAL DRAINS
PLACED TO AN ELEVATION OF 715 FT
5-FOOT EQUILATERAL TRIANGLE SPACING

PLE

STA 1365NB+02.79
119.59' RT

TLE

STA 1365NB+50.01
120.08' RT

R/W

SIGN

PREFABRICATED VERTICAL DRAINS

STA 1365NB+02.77
94.34' RT

STA 1365NB+25.01
103.47' RT

STA 1365NB+50.01
102.66' RT

USH 41 SB

INL

W

R/L USH 41 NB

1363NB 1364NB 1365NB 1366NB 1367NB 1368NB

R/L USH 10 EB TO USH 41 NB RAMP (FEN)

USH 41 NB

SLOPE INTERCEPT (TYP)

175FEN 176FEN 177FEN 178FEN 179FEN 180FEN

WISCONSIN CENTRAL LIMITED RAILROAD

PROJECT NO: 1517-07-72	HWY: USH 10	COUNTY: WINNEBAGO	PLAN DETAILS: PREFABRICATED VERTICAL DRAINS	SHEET 66	E

FILE NAME : S:\DOT\DOT_NE\120012-Tri County Freeway\1517-07-72\DGN_Files\Plansheets\021229_pd.dgn PLOT DATE : 5/1/2014 PLOT BY : wally_w PLOT NAME : PLOT SCALE : 1:40

WISDOT/CADDS SHEET 42

Addendum No. 1
ID 1517-07-72
Revised Sheet 77
May 5, 2014

NOTES:

1) PAVING GRADES FOR THE SHOULDERS ALONG WALLS R-70-105 AND R-70-115 VARY BETWEEN 2% AND 6%

2) PAVING GRADES STARTING AT STA 171FEN+00 ARE GIVEN OFF OF THE USH 41 NB ALIGNMENT

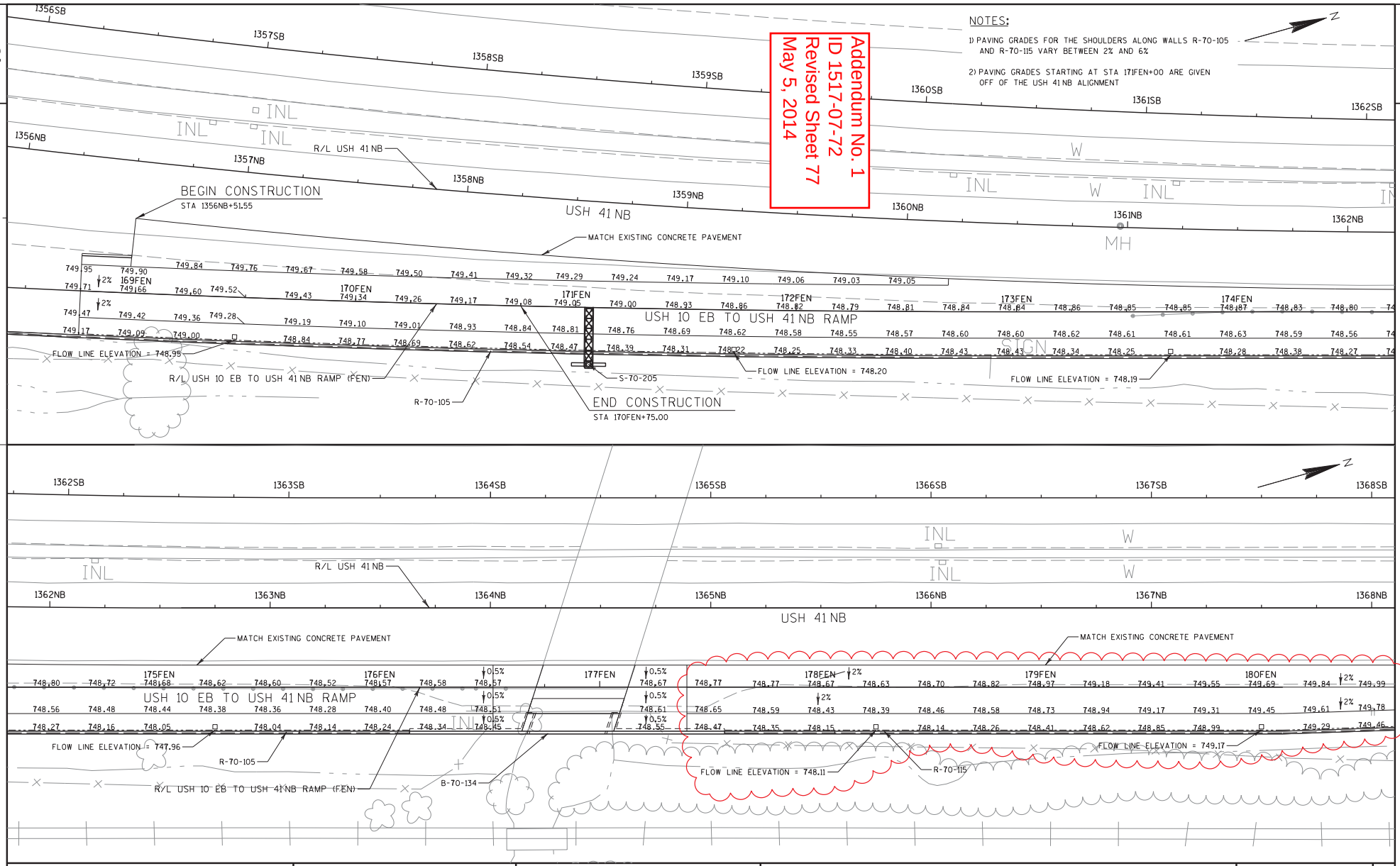

PROJECT NO: 1517-07-72	HWY: USH 10	COUNTY: WINNEBAGO	PAVING GRADES	SHEET 77	E

FILE NAME : S:\DOT\DOT_NE\120012-Tri County Freeway\1517-07-72\DGN_Files\Plansheets\021257_pg.dgn PLOT DATE : 4/24/2014 PLOT BY : wally_w PLOT NAME : PLOT SCALE : 1:40

WISDOT/CADDS SHEET 42

Addendum No. 1
ID 1517-07-72
Revised Sheet 78
May 5, 2014

NOTES:

1) PAVING GRADES FOR THE SHOULDERS ALONG WALLS R-70-105 AND R-70-115 VARY BETWEEN 2% AND 6%

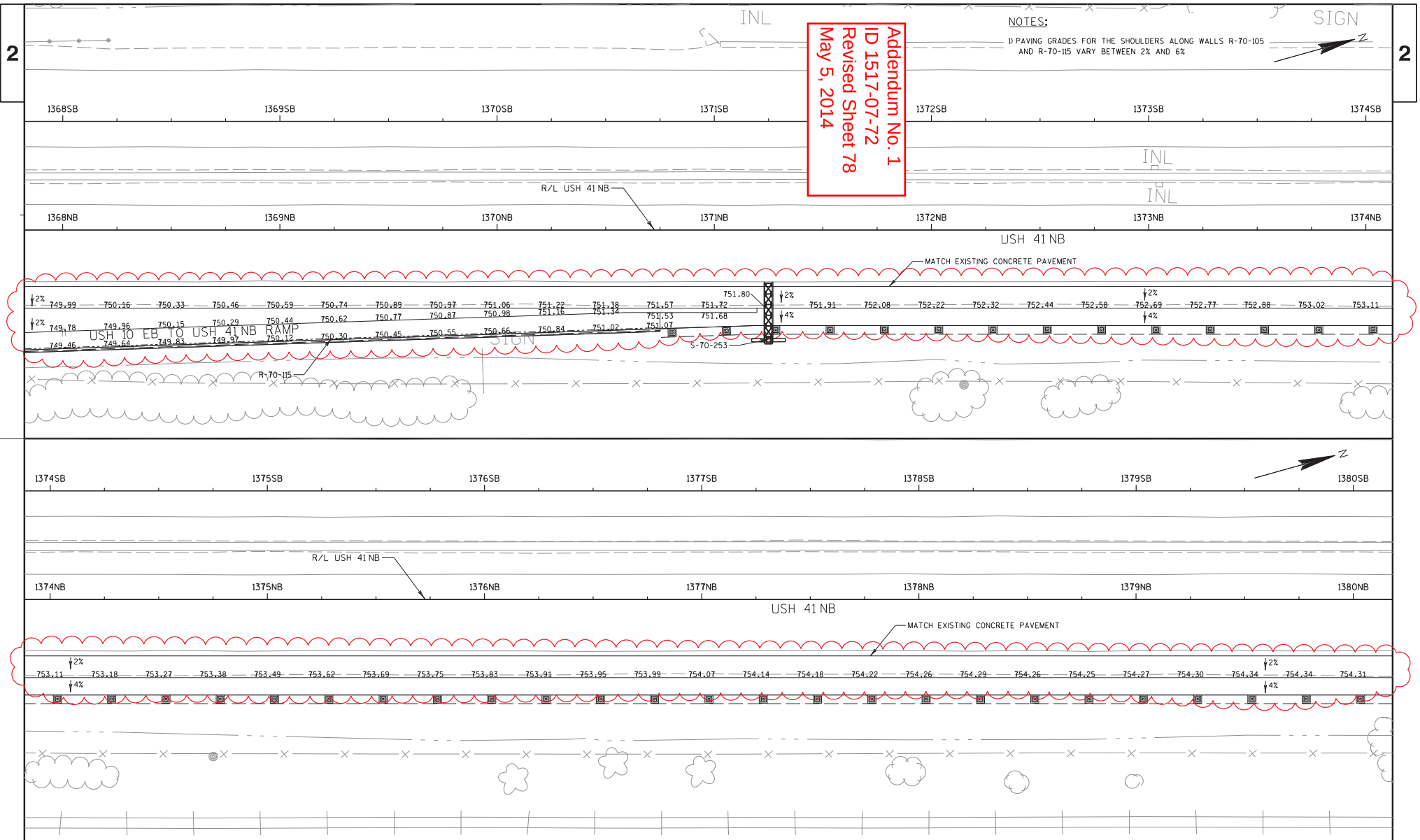

PROJECT NO: 1517-07-72	HWY: USH 10	COUNTY: WINNEBAGO	PAVING GRADES	SHEET 78	E

FILE NAME : S:\DOT\DOT_NE\120012-Tri County Freeway\1517-07-72\DGN_Files\Plansheets\021258_pg.dgn PLOT DATE : 4/24/2014 PLOT BY : wally_w PLOT NAME : PLOT SCALE : 1:40

WISDOT/CADDS SHEET 42

2

1380SB 1381SB 1382SB 1383SB 1384SB 1385SB 1386SB

SIGN

R/L USH 41 NB

1380NB 1381NB 1382NB 1383NB 1384NB 1385NB 1386NB

USH 41 NB

MATCH EXISTING CONCRETE PAVEMENT

754.31 754.33 754.36 754.36 754.35 754.36 754.36 754.44 754.53 754.57 754.67 754.87 755.06 755.26 755.43 755.57 755.72 755.91 756.06 756.14 756.19 756.20 756.14 756.05 755.96

2% 2% 0% 0% 5% 5% 5% 5%

1386SB 1387SB 1388SB 1389SB 1390SB 1391SB

R/L USH 41 NB

1386NB 1387NB 1388NB INL 1389NB 1390NB 1391NB

USH 41 NB

MATCH EXISTING CONCRETE PAVEMENT

756.05 755.96 755.86 755.71 755.54 755.43 755.33

5% 5% 5% 5%

END CONSTRUCTION

STA 1387NB+39.79

SIGN

SIGN

Addendum No. 1
ID 1517-07-72
Revised Sheet 79
May 5, 2014

PROJECT NO: 1517-07-72	HWY: USH 10	COUNTY: WINNEBAGO	PAVING GRADES	SHEET 79	E

FILE NAME : S:\DOT\DOT_NE\120012-Tri County Freeway\1517-07-72\DGN_Files\Plansheets\021259_pg.dgn PLOT DATE : 4/17/2014 PLOT BY : wally_w PLOT NAME : PLOT SCALE : 1:40

WISDOT/CADDS SHEET 42

2

EROSION CONTROL LEGEND

- EROSION MAT CLASS I, TYPE A & B
- EROSION MAT CLASS II, TYPE B
- EROSION MAT CLASS III, TYPE B
- TOPSOIL, POND EDGE SEED, TEMPORARY SEEDING, FERTILIZER, EROSION MAT CLASS I, TYPE B
- RIPRAP MEDIUM
- SILT FENCE
- EROSION BALE, BARRIER
- SLOPE INTERCEPT
- (A) INLET PROTECTION TYPE A
- (B) INLET PROTECTION TYPE B
- (C) INLET PROTECTION TYPE C
- (D) INLET PROTECTION TYPE D
- TEMPORARY DITCH CHECK
- CULVERT PIPE DITCH CHECK
- SURFACE WATER FLOW
- TURBIDITY BARRIERS

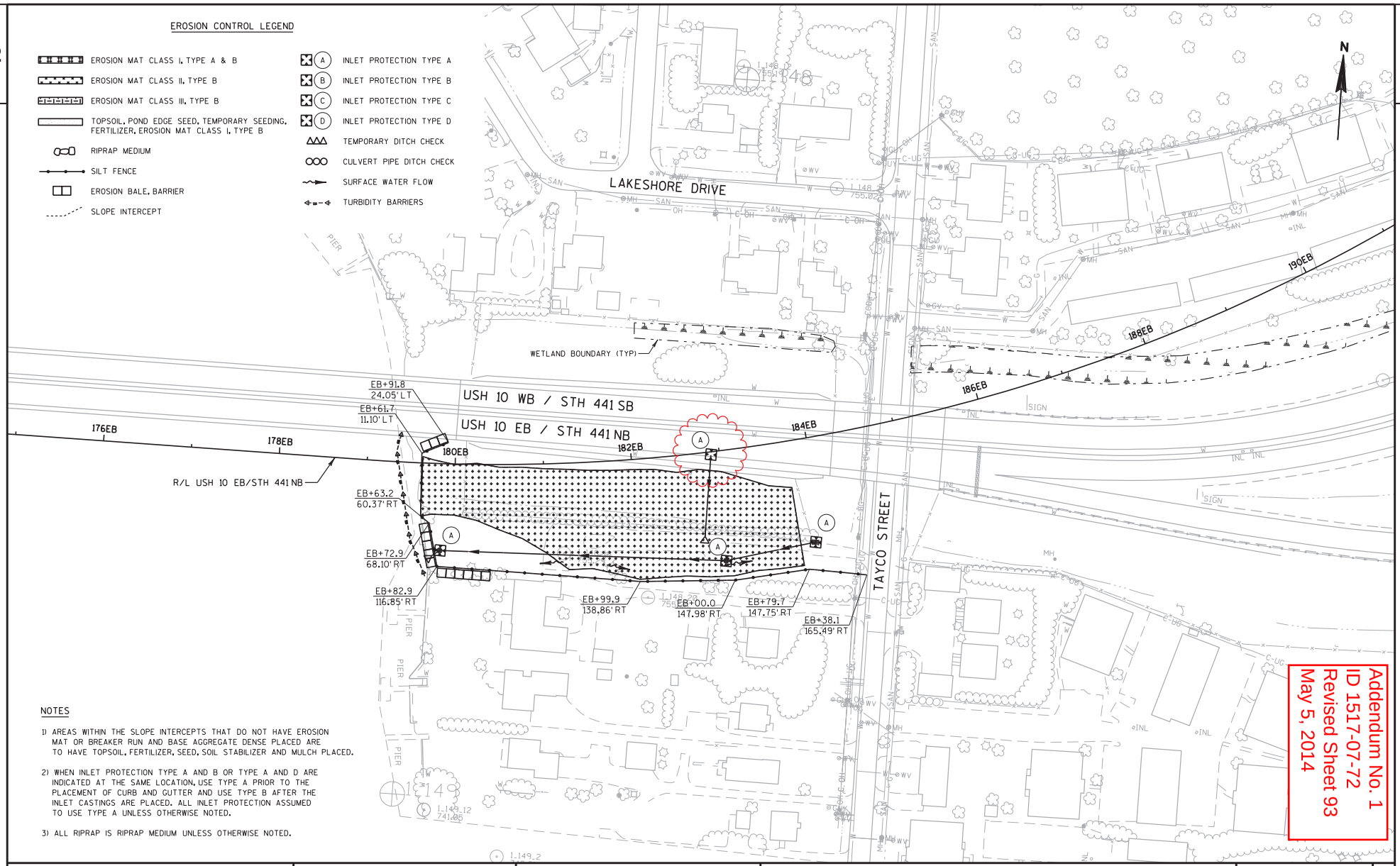

Addendum No. 1
ID 1517-07-72
Revised Sheet 93
May 5, 2014

NOTES

1) AREAS WITHIN THE SLOPE INTERCEPTS THAT DO NOT HAVE EROSION MAT OR BREAKER RUN AND BASE AGGREGATE DENSE PLACED ARE TO HAVE TOPSOIL, FERTILIZER, SEED, SOIL STABILIZER AND MULCH PLACED.

2) WHEN INLET PROTECTION TYPE A AND B OR TYPE A AND D ARE INDICATED AT THE SAME LOCATION, USE TYPE A PRIOR TO THE PLACEMENT OF CURB AND GUTTER AND USE TYPE B AFTER THE INLET CASTINGS ARE PLACED. ALL INLET PROTECTION ASSUMED TO USE TYPE A UNLESS OTHERWISE NOTED.

3) ALL RIPRAP IS RIPRAP MEDIUM UNLESS OTHERWISE NOTED.

PROJECT NO: 1517-07-72	HWY: USH 10	COUNTY: WINNEBAGO	EROSION CONTROL	SHEET 93	E

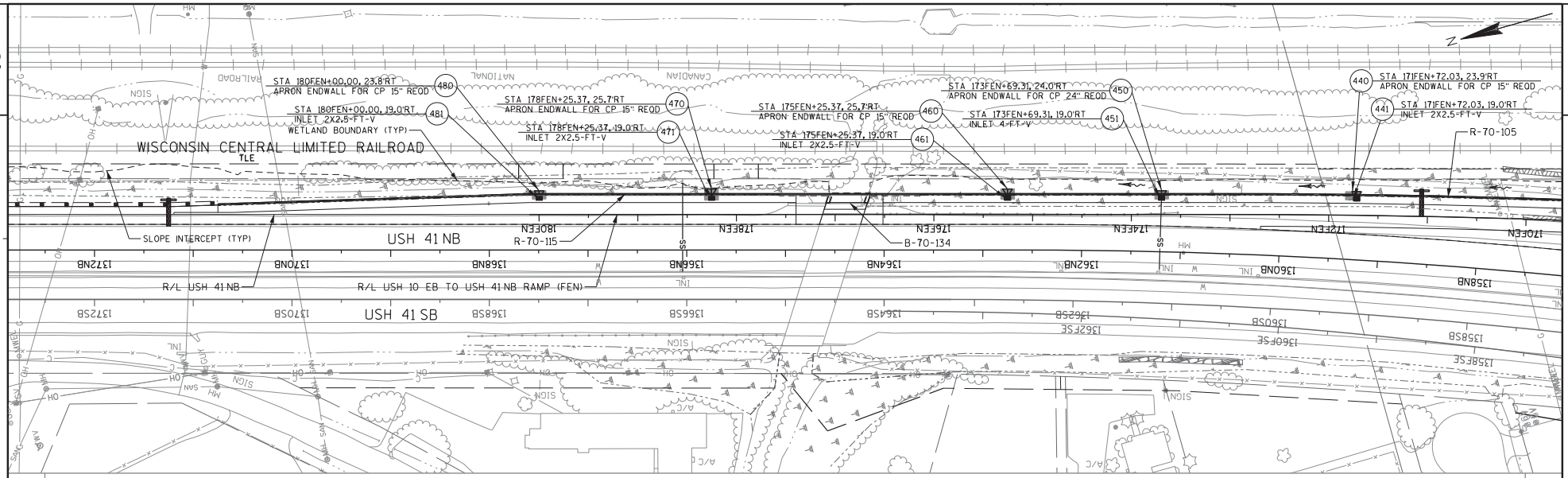

Addendum No. 1
ID 1517-07-72
Revised Sheet 102
May 5, 2014

PROJECT NO: 1517-07-72	HWY: USH 10	COUNTY: WINNEBAGO	STORM SEWER PLAN & PROFILE: USH 41 NB / FEN RAMP	SHEET 102	E

2

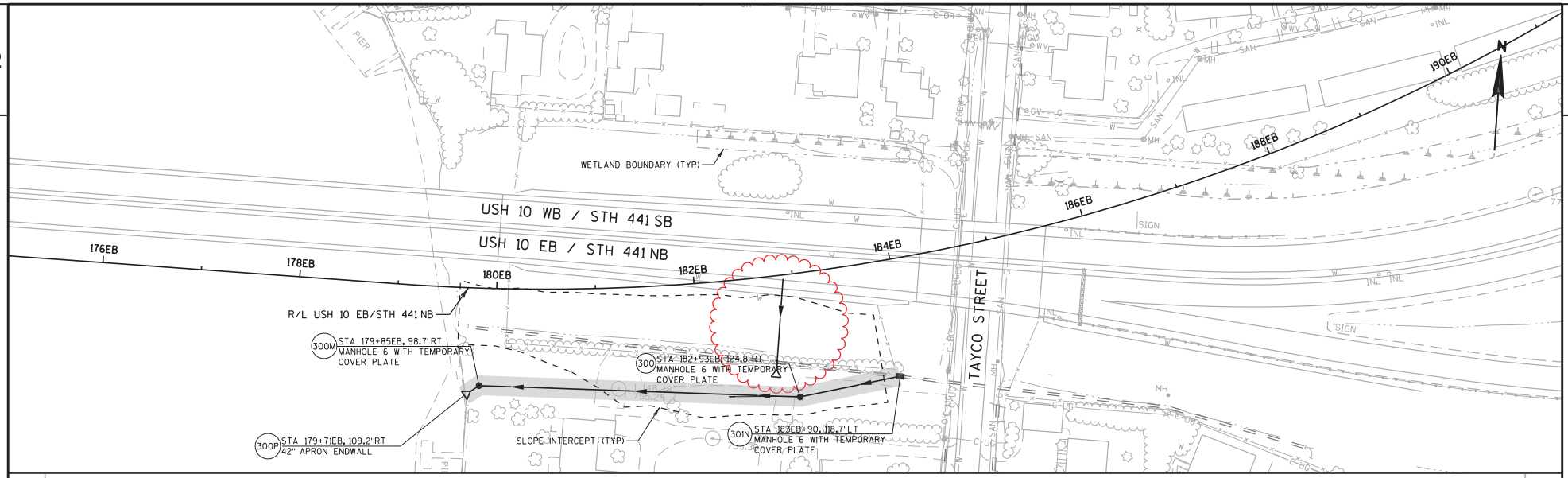

2

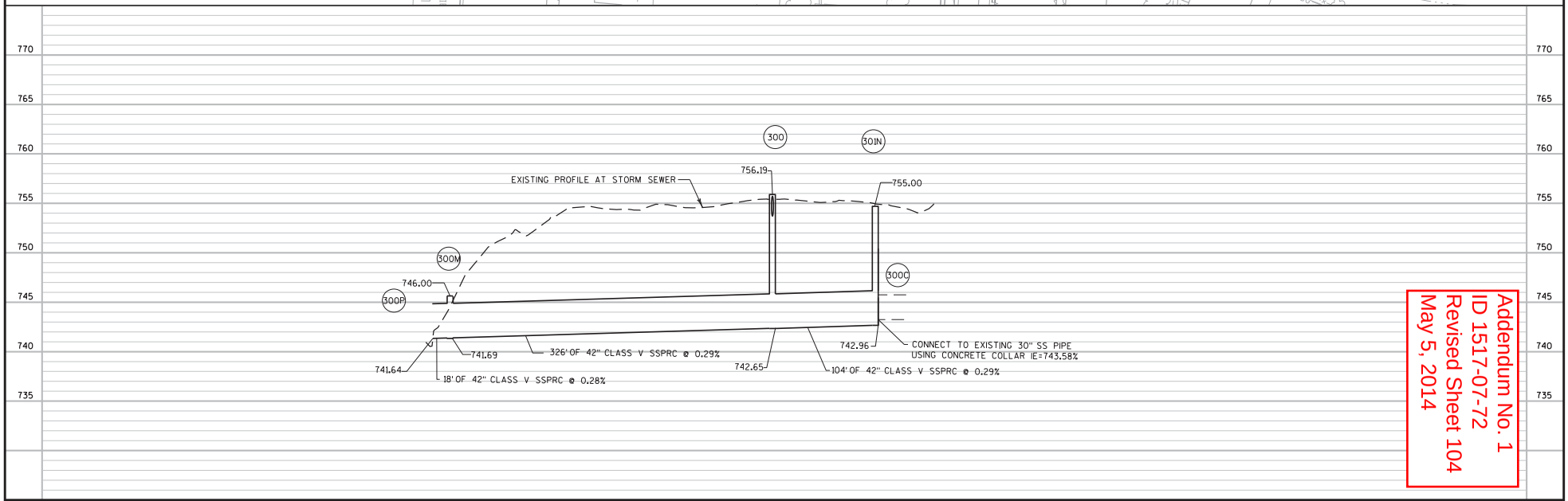

Addendum No. 1
ID 1517-07-72
Revised Sheet 104
May 5, 2014

PROJECT NO:1517-07-72	HWY:USH 10	COUNTY:WINNEBAGO	STORM SEWER	SHEET 104	E

FILE NAME : \\milw00\ingrproj\56537\1517-07-71_72_73_KA_System\t1\cds\022518_ss.dgn PLOT DATE : 4/16/2014 5:32:24 PM PLOT BY : nspitzer PLOT NAME : $FILE$ PLOT SCALE : 100:1

WISDOT/CADDS SHEET 41

2

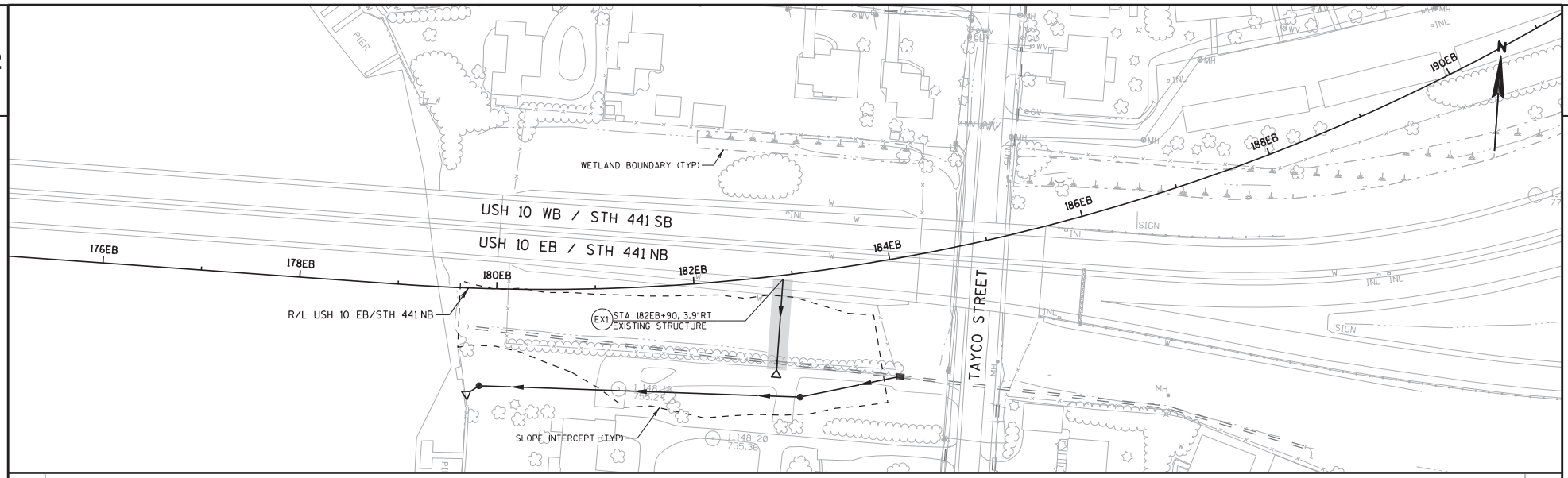

2

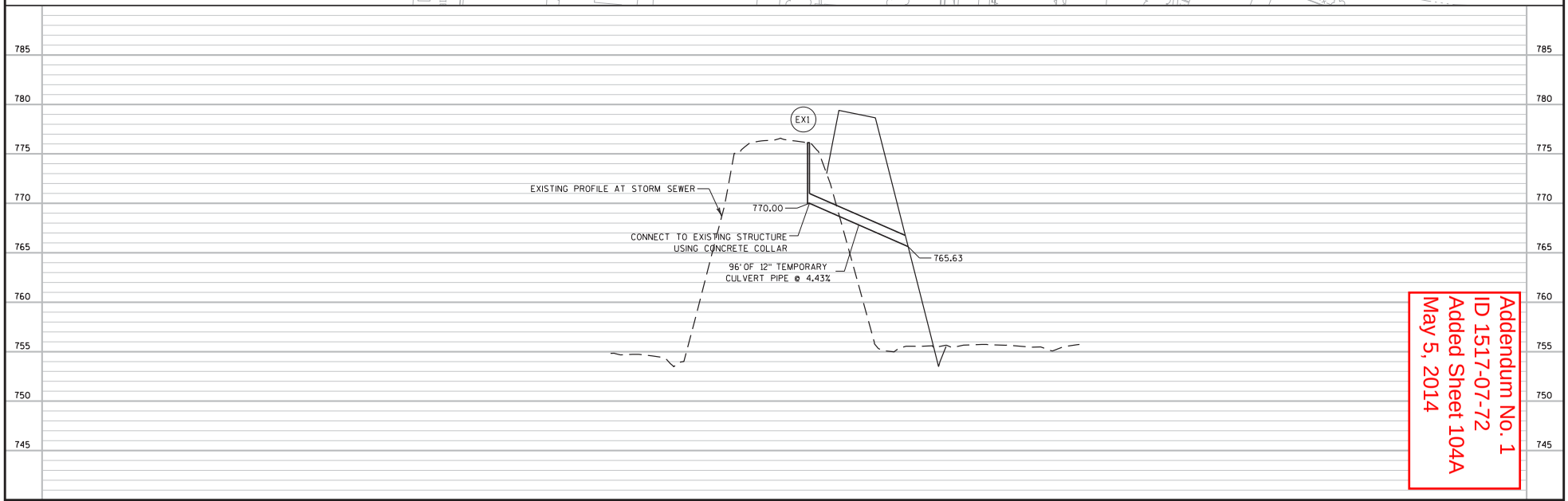

Addendum No. 1
ID 1517-07-72
Added Sheet 104A
May 5, 2014

PROJECT NO:1517-07-72	HWY:USH 10	COUNTY:WINNEBAGO	STORM SEWER - TEMPORARY	SHEET 104A	E

2

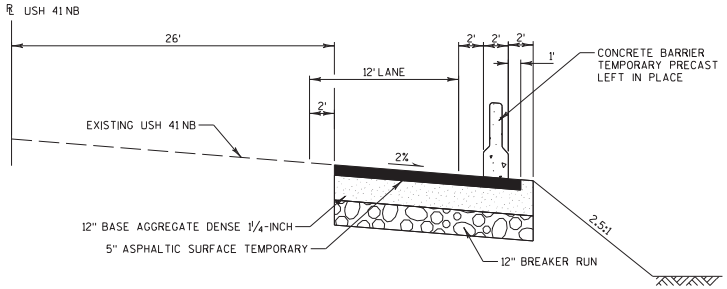

TYPICAL FINISHED SECTION
TNE RAMP
STA 1310NB+79.24 - STA 1320NB+66.49

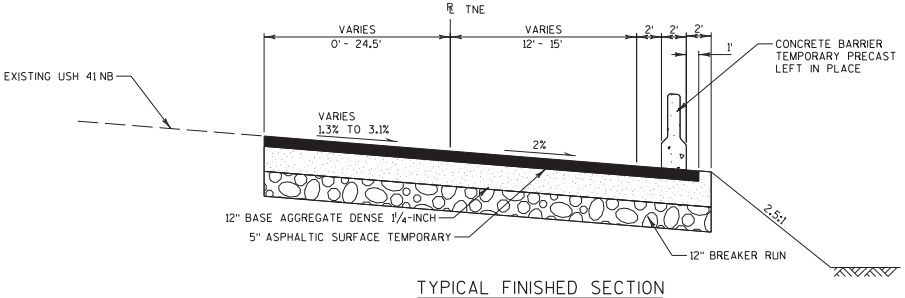

TYPICAL FINISHED SECTION
TNE RAMP
STA 20TNE+65.52 - STA 24TNE+15.48

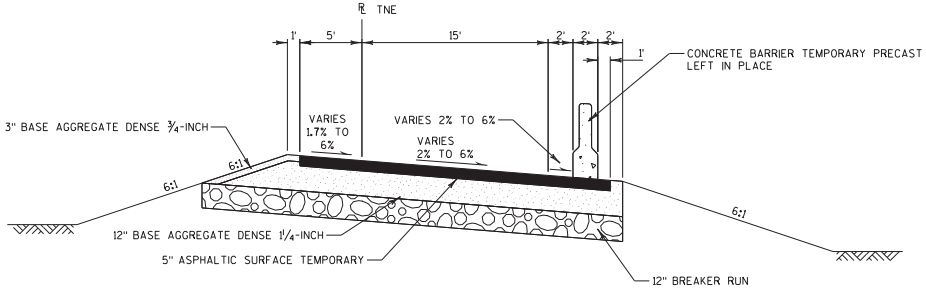

TYPICAL FINISHED SECTION
TNE RAMP
STA 24TNE+15.48 - STA 28TNE+44.40

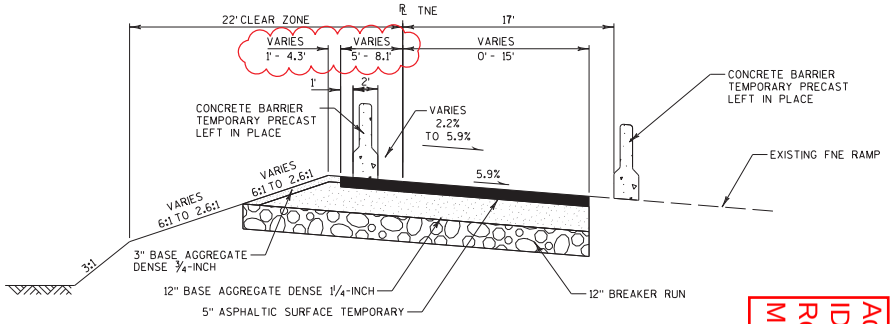

TYPICAL FINISHED SECTION
TNE RAMP
STA 28TNE+44.40 - STA 29TNE+83.16

Addendum No. 1
ID 1517-07-72
Revised Sheet 119
May 5, 2014

2

PROJECT NO: 1517-07-72	HWY: USH 10	COUNTY: WINNEBAGO	TRAFFIC CONTROL - TYPICAL SECTIONS	SHEET 119	E

2

LEFT EDGE OF PAVED SHOULDER	STATION	RIGHT
MATCH AT GORE END	24TNE+15.49	1.7%
REVERSE CROWN	24TNE+25.00	2%

RIGHT EDGE OF PAVEMENT	STATION	RIGHT
REVERSE CROWN	24TNE+59.20	-2%
BEGIN FULL SUPER	25TNE+91.20	-6%
END FULL SUPER	27TNE+88.96	-6%
MATCH EXISTING SUPER	27TNE+91.16	-5.9%

LEGEND

- AGO1 BASE AGGREGATE DENSE 3/4-INCH
- AGO2 BASE AGGREGATE DENSE 1 1/4-INCH
- PVO3 ASPHALTIC SURFACE TEMPORARY, 5-INCH

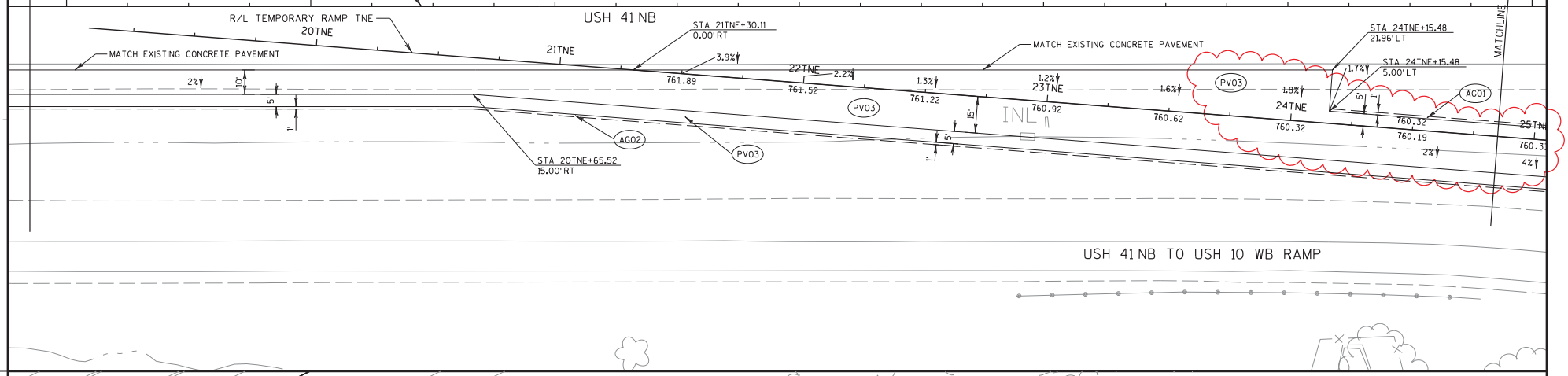

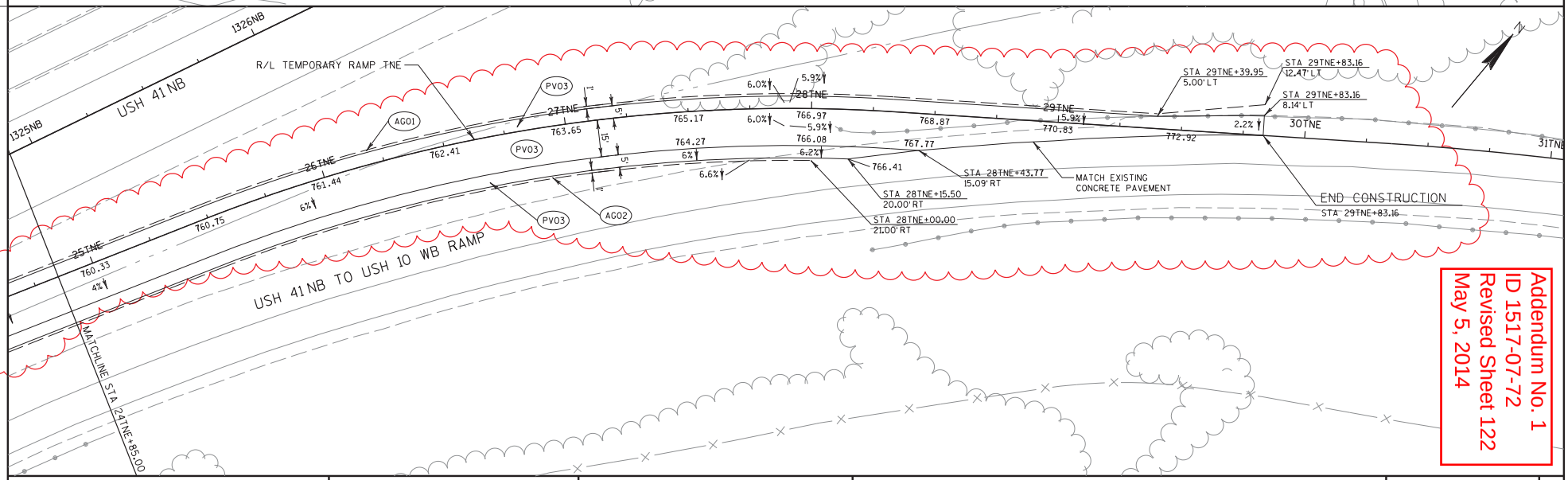

Addendum No. 1
ID 1517-07-72
Revised Sheet 122
May 5, 2014

PROJECT NO: 1517-07-72	HWY: USH 10	COUNTY: WINNEBAGO	TRAFFIC CONTROL - TEMPORARY RAMP PAVING GRADES	SHEET 122	E

FILE NAME : S:\DOT\DOT_NE\120012-Tri County Freeway\1517-07-72\DGN_Files\Plansheets\025010_tc.dgn PLOT DATE : 4/23/2014 PLOT BY : wally_w PLOT NAME : PLOT SCALE : 1:40

WISDOT/CADDS SHEET 42

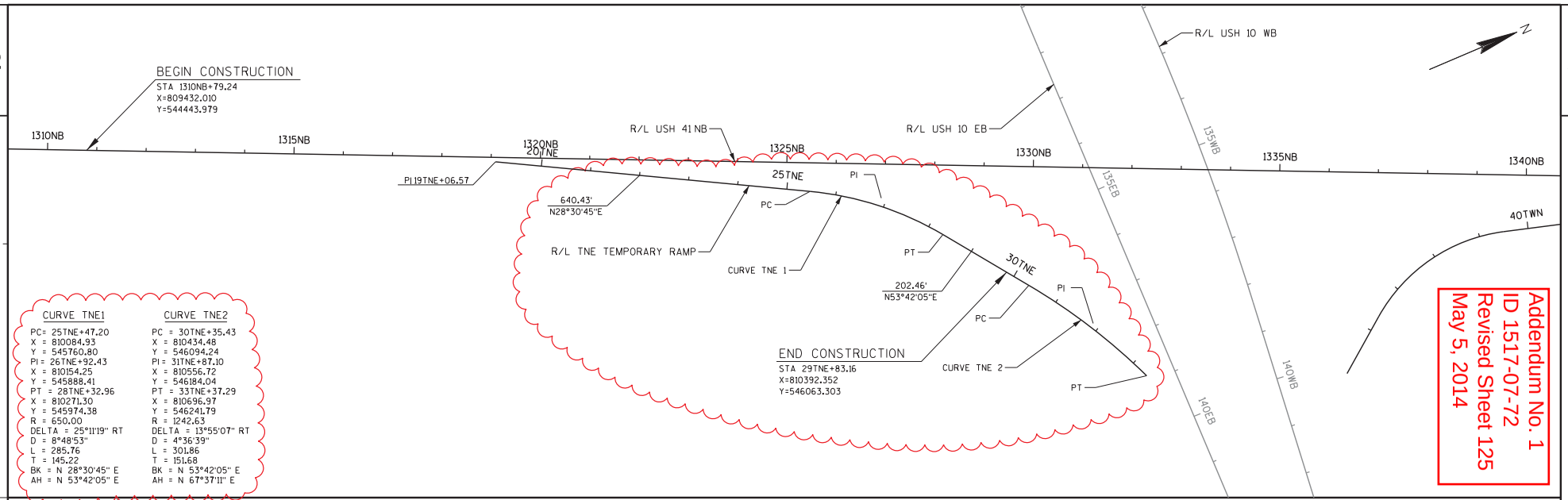

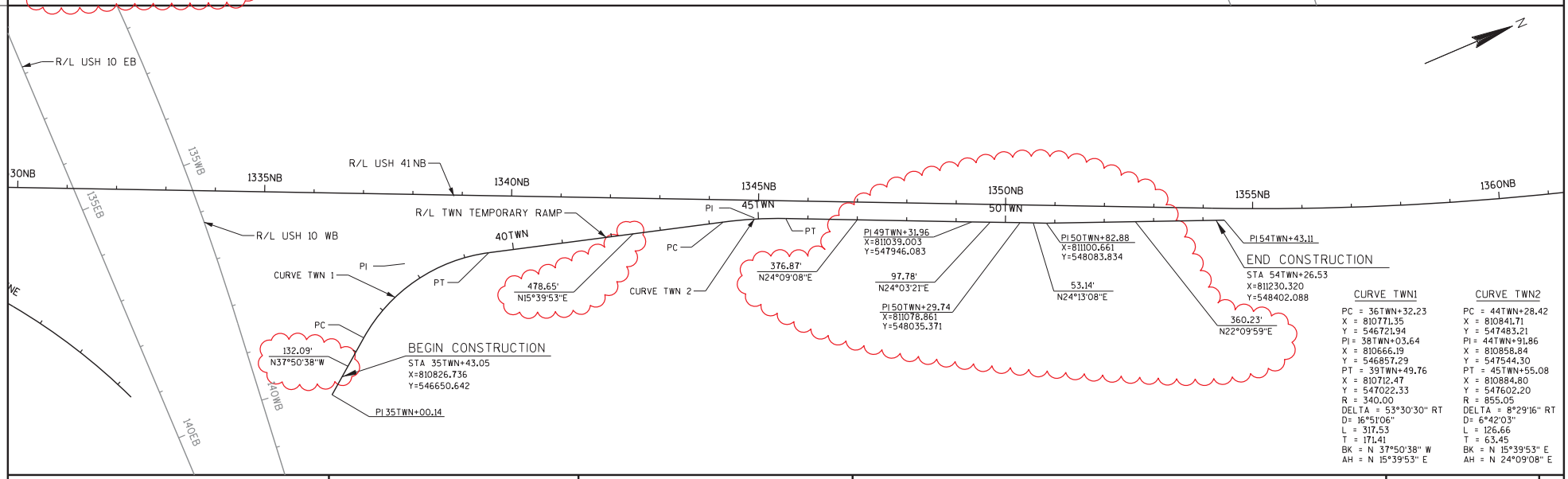

PROJECT NO: 1517-07-72	HWY: USH 10	COUNTY: WINNEBAGO	TRAFFIC CONTROL ALIGNMENT - TEMPORARY RAMPS	SHEET 125	E

FILE NAME : S:\DOT\DOT_NE\120012-Tri County Freeway\1517-07-72\DGN_Files\Plansheets\025027_tc.dgn PLOT DATE : 4/17/2014 PLOT BY : wally_w PLOT NAME : PLOT SCALE : 1:200 WISDOT/CADDS SHEET 42

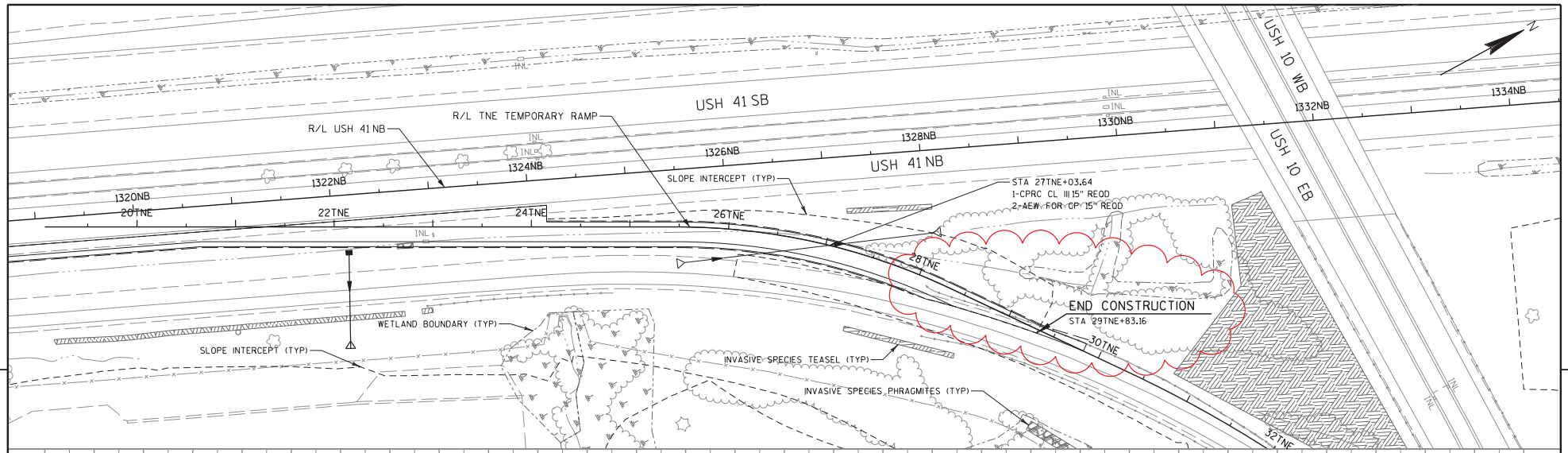

5

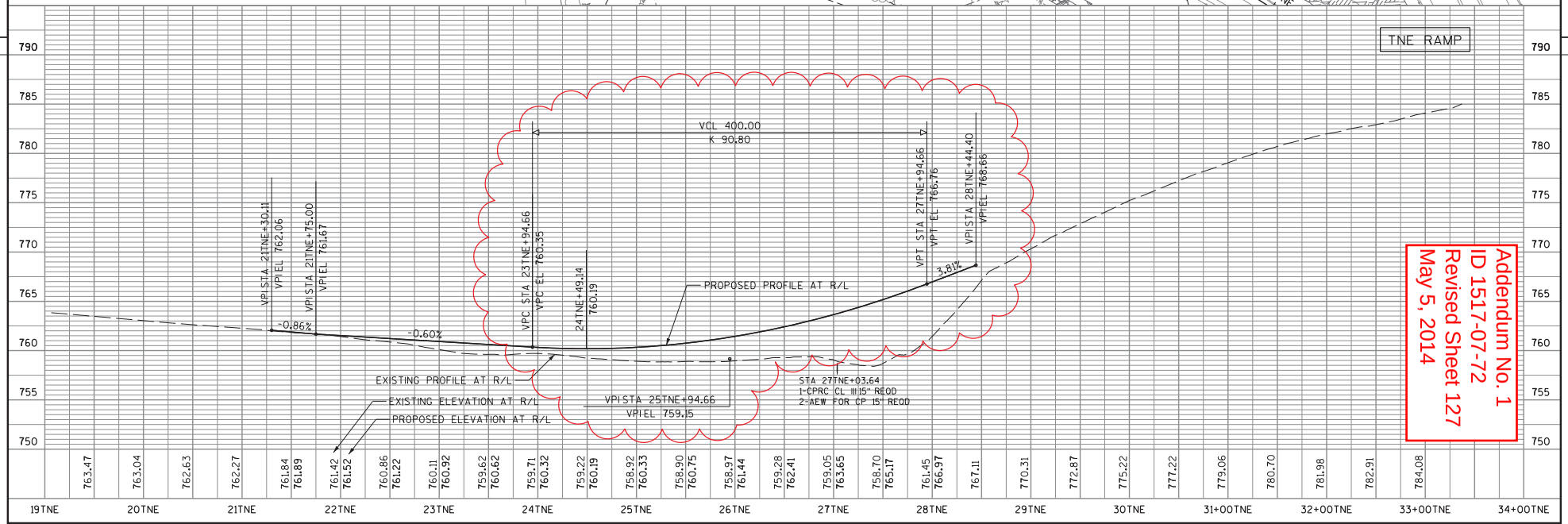

Addendum No. 1
ID 1517-07-72
Revised Sheet 127
May 5, 2014

PROJECT NO: 1517-07-72	HWY: USH 10	COUNTY: WINNEBAGO	TRAFFIC CONTROL - PLAN & PROFILE TEMPORARY RAMP TNE	SHEET 127	E

FILE NAME : S:\DOT\DOT_NE\120012-Tri County Freeway\1517-07-72\DGN_Files\Plansheets\025031_tc.dgn PLOT DATE : 4/23/2014 PLOT BY : wally_w PLOT NAME : PLOT SCALE : 1:100

WISDOT/CADDS SHEET 45

2

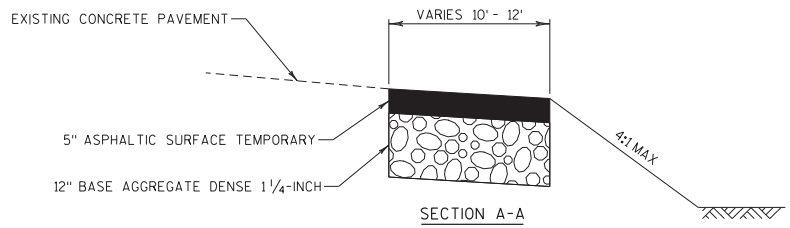

SECTION A-A

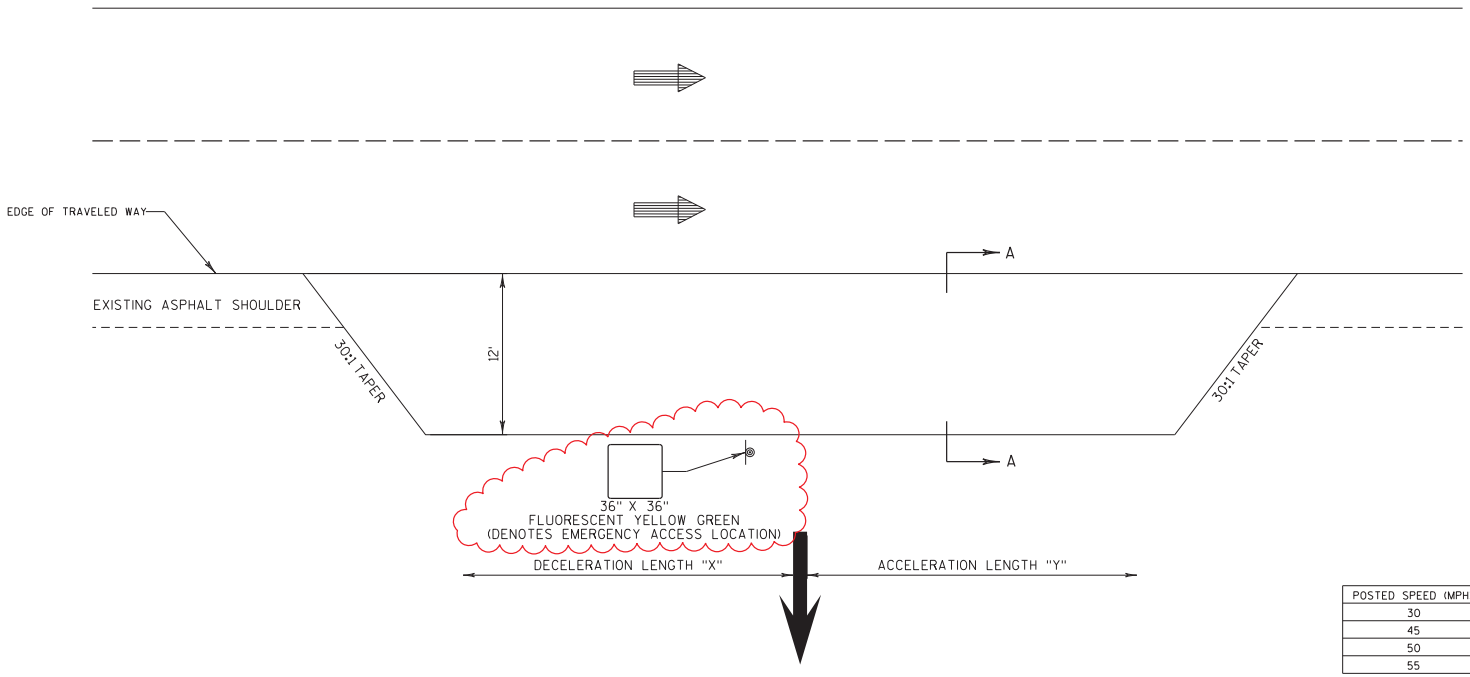

CONSTRUCTION ACCESS DETAIL

POSTED SPEED (MPH)	X (FEET)	Y (FEET)
30	250'	250'
45	400'	450'
50	450'	600'
55	500'	750'

Addendum No. 1
ID 1517-07-72
Revised Sheet 131
May 5, 2014

2

PROJECT NO: 1517-07-72	HWY: USH 10	COUNTY: WINNEBAGO	TRAFFIC CONTROL - CONSTRUCTION DETAILS	SHEET 131	E

FILE NAME : S:\DOT\DOT_NE\120012-Tri County Freeway\1517-07-72\DGN_Files\Plansheets\025041_tc.dgn PLOT DATE : 4/23/2014 PLOT BY : wally_w PLOT NAME : PLOT SCALE : 1:200 WISDOT/CADDS SHEET 42

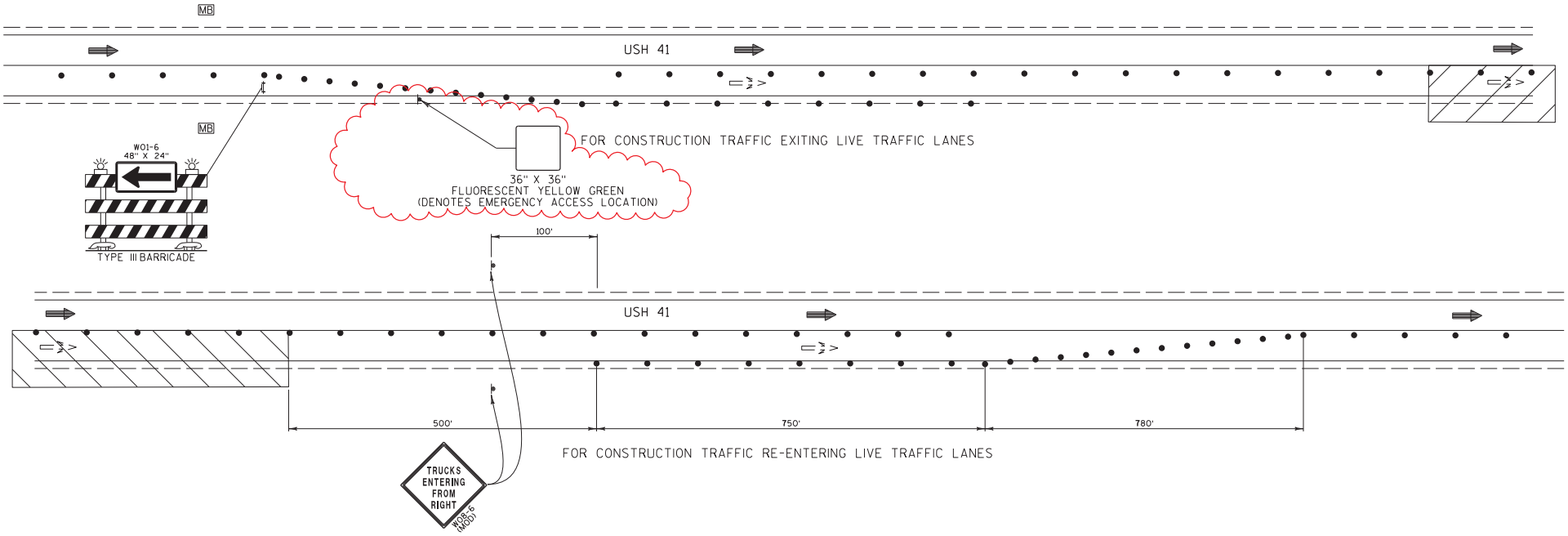

TRAFFIC CONTROL DETAIL FOR CONSTRUCTION ACCESS TO USH 41

Addendum No. 1
ID 1517-07-72
Revised Sheet 132
May 5, 2014

NOTE:
SPACING AND LOCATIONS OF DEVICES IN THE FIELD SUBJECT TO REVIEW AND APPROVAL BY THE ENGINEER

SEE OTHER TRAFFIC CONTROL DETAILS AND STANDARD DETAIL DRAWINGS FOR LANE CLOSURE DETAILS

PORTABLE MESSAGE SIGN MESSAGES SHOULD READ:

FRAME 1	FRAME 2
TRUCKS EXITING RIGHT	TRAFFIC STAY LEFT

LEGEND

- TRAFFIC CONTROL DRUM
- TRAFFIC CONTROL SIGN
- USH 41 TRAFFIC
- CONSTRUCTION TRAFFIC
- WORK ZONE
- MB PORTABLE CHANGEABLE MESSAGE BOARD

PROJECT NO: 1517-07-72	HWY: USH 10	COUNTY: WINNEBAGO	TRAFFIC CONTROL - CONSTRUCTION DETAILS	SHEET 132	E

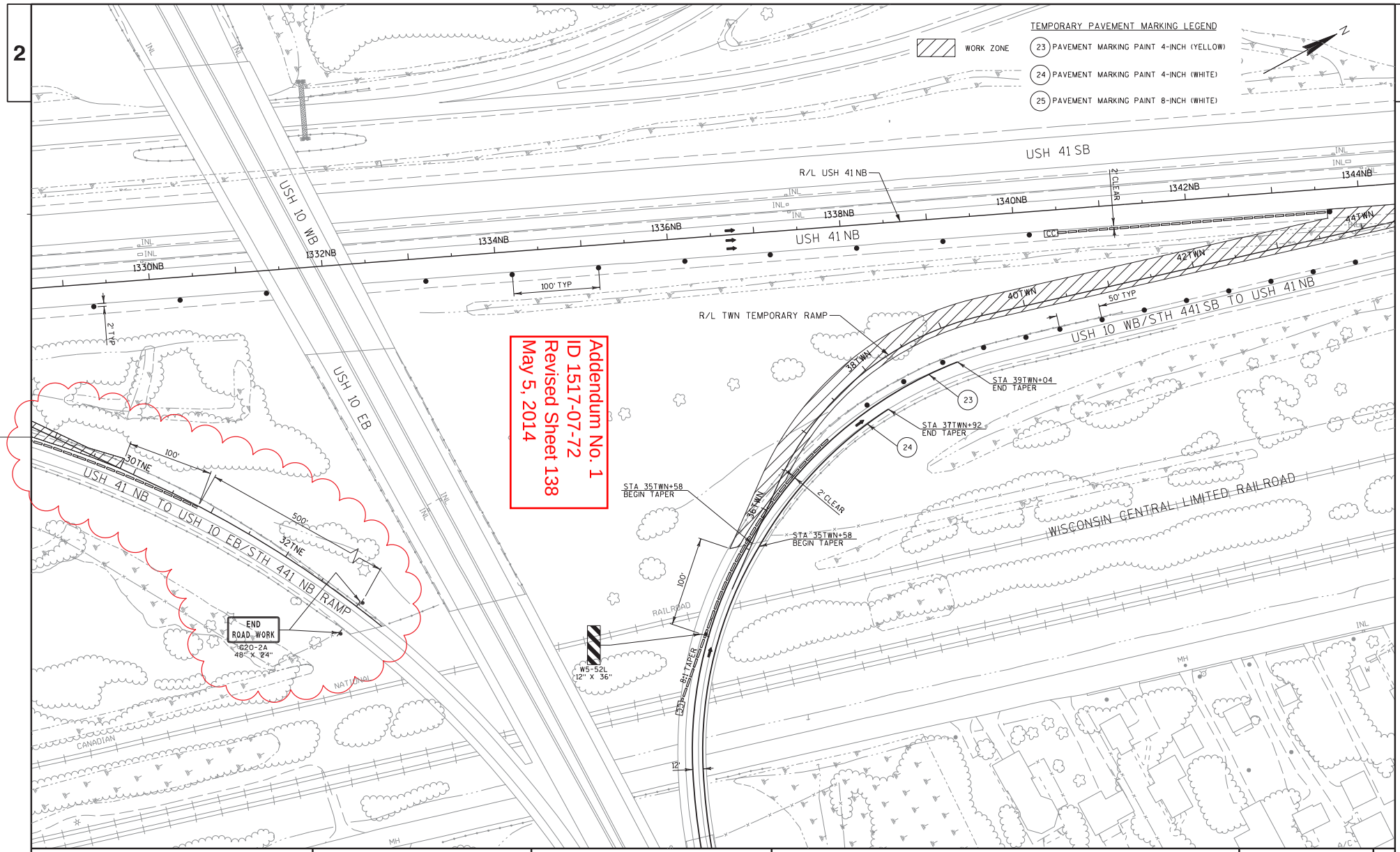

Addendum No. 1
ID 1517-07-72
Revised Sheet 138
May 5, 2014

PROJECT NO: 1517-07-72	HWY: USH 10	COUNTY: WINNEBAGO	TRAFFIC CONTROL PLAN: PRELIMINARY STAGE SHEET 3	SHEET 138	E

FILE NAME : S:\DOT\DOT_NE\120012-Tri County Freeway\1517-07-72\DGN_Files\Plansheets\025056_tc.dgn PLOT DATE : 4/17/2014 PLOT BY : wally_w PLOT NAME : PLOT SCALE : 1:100

WISDOT/CADDS SHEET 42

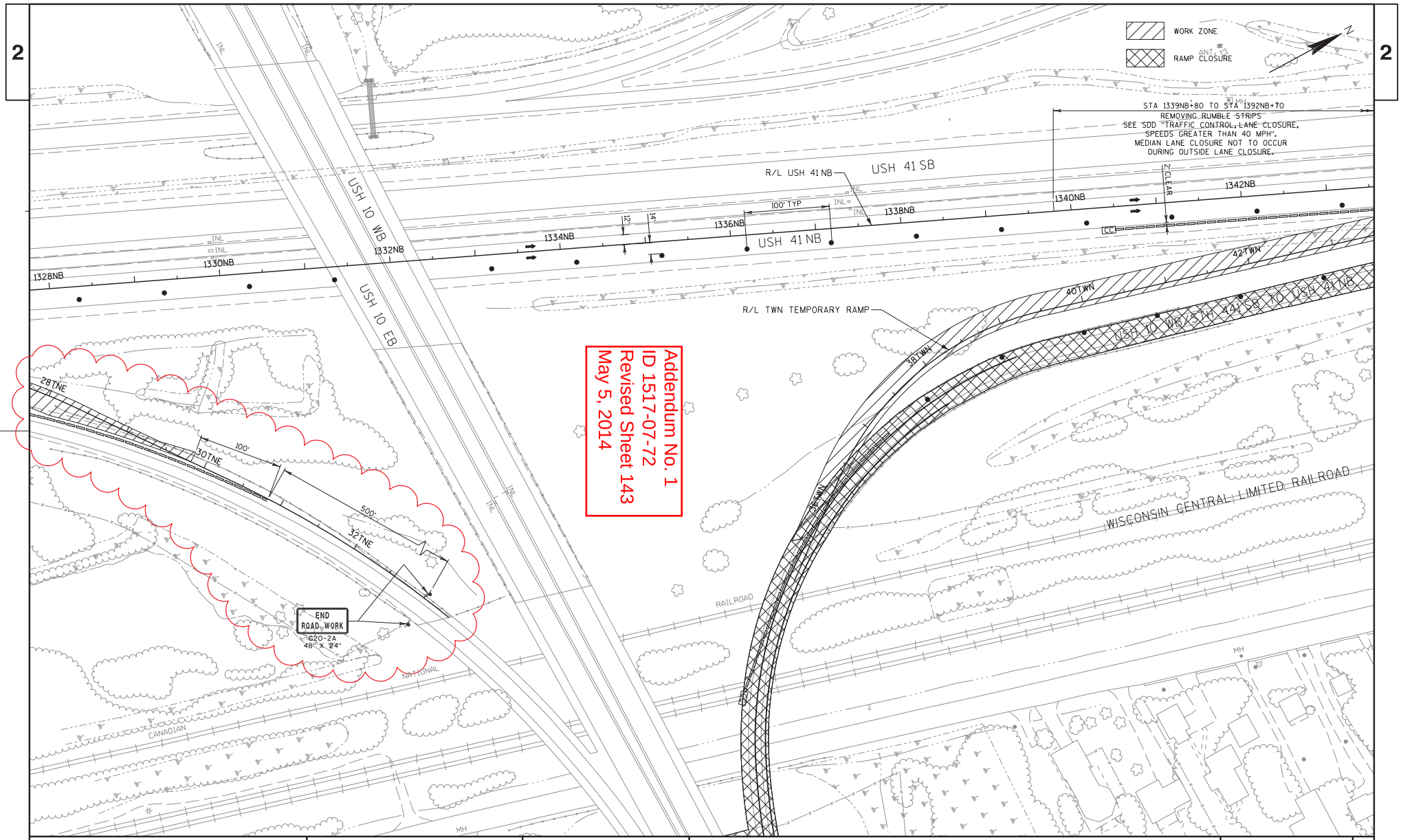

Addendum No. 1
ID 1517-07-72
Revised Sheet 143
May 5, 2014

PROJECT NO: 1517-07-72	HWY: USH 10	COUNTY: WINNEBAGO	TRAFFIC CONTROL PLAN: PRELIMINARY STAGE - LANE/RAMP CLOSURE SHEET 3	SHEET 143	E

FILE NAME : S:\DOT\DOT_NE\120012-Tri County Freeway\1517-07-72\DGN_Files\Plansheets\025066_tc.dgn PLOT DATE : 4/17/2014 PLOT BY : wally_w PLOT NAME : PLOT SCALE : 1:100

WISDOT/CADDS SHEET 42

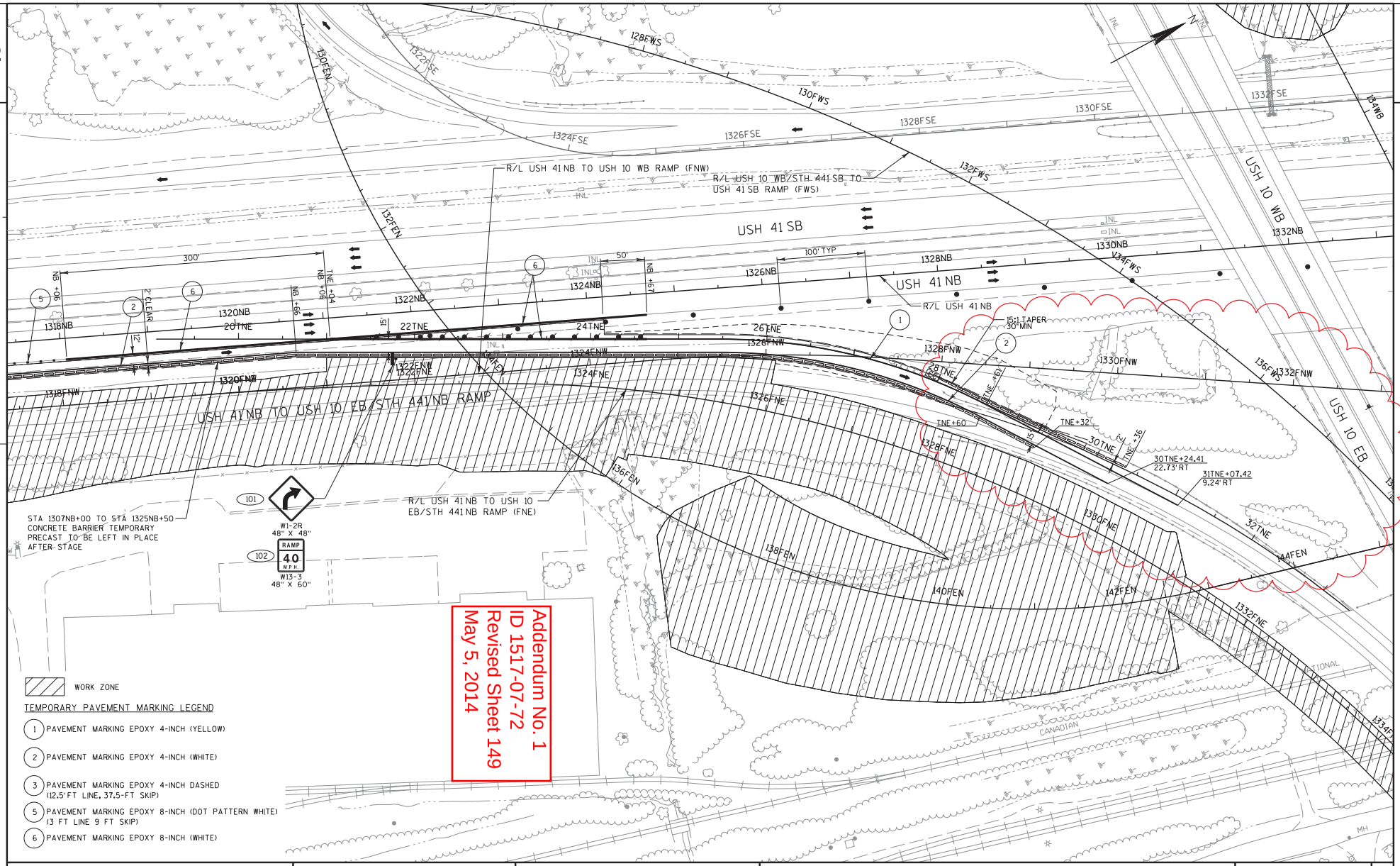

Addendum No. 1
ID 1517-07-72
Revised Sheet 149
May 5, 2014

WORK ZONE

TEMPORARY PAVEMENT MARKING LEGEND

1. PAVEMENT MARKING EPOXY 4-INCH (YELLOW)
2. PAVEMENT MARKING EPOXY 4-INCH (WHITE)
3. PAVEMENT MARKING EPOXY 4-INCH DASHED (12.5' FT LINE, 37.5-FT SKIP)
5. PAVEMENT MARKING EPOXY 8-INCH (DOT PATTERN WHITE) (3 FT LINE 9 FT SKIP)
6. PAVEMENT MARKING EPOXY 8-INCH (WHITE)

PROJECT NO: 1517-07-72	HWY: USH 10	COUNTY: WINNEBAGO	TRAFFIC CONTROL PLAN: STAGE 1A & 1B SHEET 2	SHEET 149	E

FILE NAME : S:\DOT\DOT_NE\120012-Tri County Freeway\1517-07-72\DGN_Files\Plansheets\025073_tc.dgn PLOT DATE : 4/23/2014 PLOT BY : wally_w PLOT NAME : PLOT SCALE : 1:100 WISDOT/CADDS SHEET 42

2

R/L USH 41 NB TO USH 10 WB RAMP (FNW)

R/L USH 10 WB/STH 441 SB TO USH 41 SB RAMP (FWS)

USH 41 SB

USH 41 NB

R/L USH 41 NB

USH 10 WB

USH 10 EB

USH 41 NB TO USH 10 EB/STH 441 NB RAMP

15:1 TAPER 30' MIN

STA 1307NB+00 TO STA 1325NB+50 CONCRETE BARRIER TEMPORARY PRECAST TO BE LEFT IN PLACE AFTER STAGE

R/L USH 41 NB TO USH 10 EB/STH 441 NB RAMP (FNE)

W1-2R 48" X 48"

RAMP 40 M.P.H. W13-3 48" X 60"

COORDINATE TRAFFIC CONTROL WITH PROJECT ID 1517-07-76

32TNE+37.29 0.00' RT

32TNE+37.29 12.00' RT

Addendum No. 1
ID 1517-07-72
Added Sheet 149A
May 5, 2014

WORK ZONE

TEMPORARY PAVEMENT MARKING LEGEND

1. PAVEMENT MARKING EPOXY 4-INCH (YELLOW)
2. PAVEMENT MARKING EPOXY 4-INCH (WHITE)
3. PAVEMENT MARKING EPOXY 4-INCH DASHED (12.5' FT LINE, 37.5-FT SKIP)
5. PAVEMENT MARKING EPOXY 8-INCH (DOT PATTERN WHITE) (3 FT LINE 9 FT SKIP)
6. PAVEMENT MARKING EPOXY 8-INCH (WHITE)

PROJECT NO: 1517-07-72	HWY: USH 10	COUNTY: WINNEBAGO	TRAFFIC CONTROL PLAN: STAGE 1A & 1B SHEET 2 (COORDINATE WITH 1517-07-76)	SHEET 149A	E

FILE NAME : S:\DOT\DOT_NE\120012-Tri County Freeway\1517-07-72\DGN_Files\Plansheets\025073B_tc.dgn PLOT DATE : 4/23/2014 PLOT BY : wally_w PLOT NAME : PLOT SCALE : 1:100

WISDOT/CADDS SHEET 42

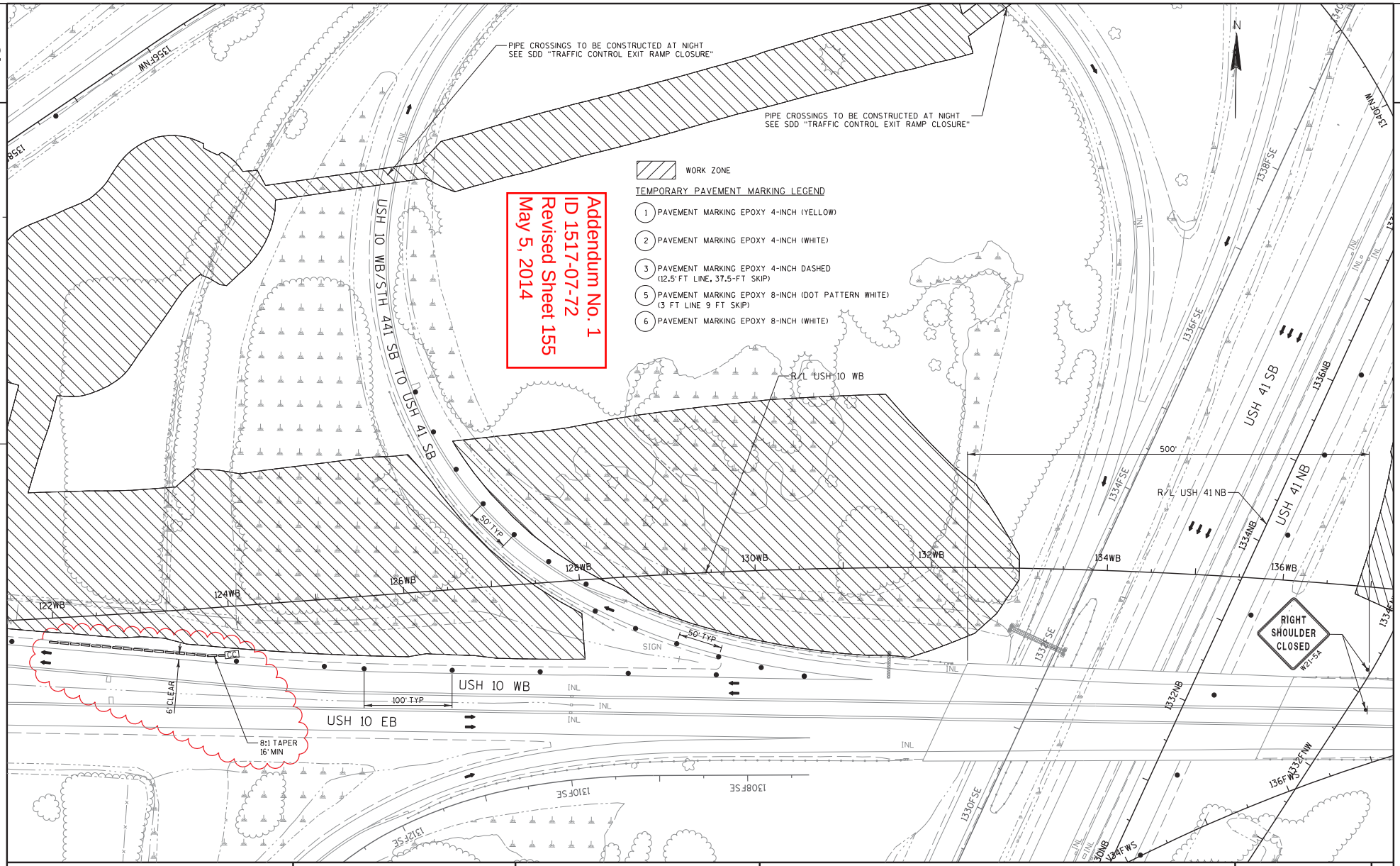

PROJECT NO: 1517-07-72	HWY: USH 10	COUNTY: WINNEBAGO	TRAFFIC CONTROL PLAN: STAGE 1A & 1B SHEET 8	SHEET 155	E

FILE NAME : S:\DOT\DOT_NE\120012-Tri County Freeway\1517-07-72\DGN_Files\Plansheets\025079_tc.dgn PLOT DATE : 4/24/2014 PLOT BY : wally_w PLOT NAME : PLOT SCALE : 1:100

WISDOT/CADDS SHEET 42

2

WORK ZONE

TEMPORARY PAVEMENT MARKING LEGEND

1. PAVEMENT MARKING EPOXY 4-INCH (YELLOW)
2. PAVEMENT MARKING EPOXY 4-INCH (WHITE)
3. PAVEMENT MARKING EPOXY 4-INCH DASHED (12.5' FT LINE, 37.5-FT SKIP)
5. PAVEMENT MARKING EPOXY 8-INCH (DOT PATTERN WHITE) (3 FT LINE 9 FT SKIP)
6. PAVEMENT MARKING EPOXY 8-INCH (WHITE)

Addendum No. 1
ID 1517-07-72
Revised Sheet 156
May 5, 2014

R/L USH 41 NB TO USH 10 WB RAMP (FNW)

END ROAD WORK
G20-2A
48" X 24"

USH 41 SB TO USH 10 WB

USH 10 WB

R/L USH 10 WB

100' TYP

USH 10 EB

6' CLEAR

SEE SDD "TRAFFIC CONTROL, SHOULDER CLOSURE ON DIVIDED ROADWAY, SPEEDS GREATER THAN 40 MPH"

R/L USH 10 EB TO USH 41 NB RAMP (FEN)

108FEN 110FEN 112FEN 114FEN 116FEN

108WB 110WB 112WB 114WB 116WB 118WB 120WB 122WB

1358FNW 1360FNW 1362FNW 1364FNW 1366FNW 1368FNW 1370FNW 1372FNW

BIKE PATH

WALLS

BERM

PROJECT NO: 1517-07-72	HWY: USH 10	COUNTY: WINNEBAGO	TRAFFIC CONTROL PLAN: STAGE 1A & 1B SHEET 9	SHEET 156	E

FILE NAME : S:\DOT\DOT_NE\120012-Tri County Freeway\1517-07-72\DGN_Files\Plansheets\025080_tc.dgn PLOT DATE : 4/24/2014 PLOT BY : wally_w PLOT NAME : PLOT SCALE : 1:100

WISDOT/CADDS SHEET 42

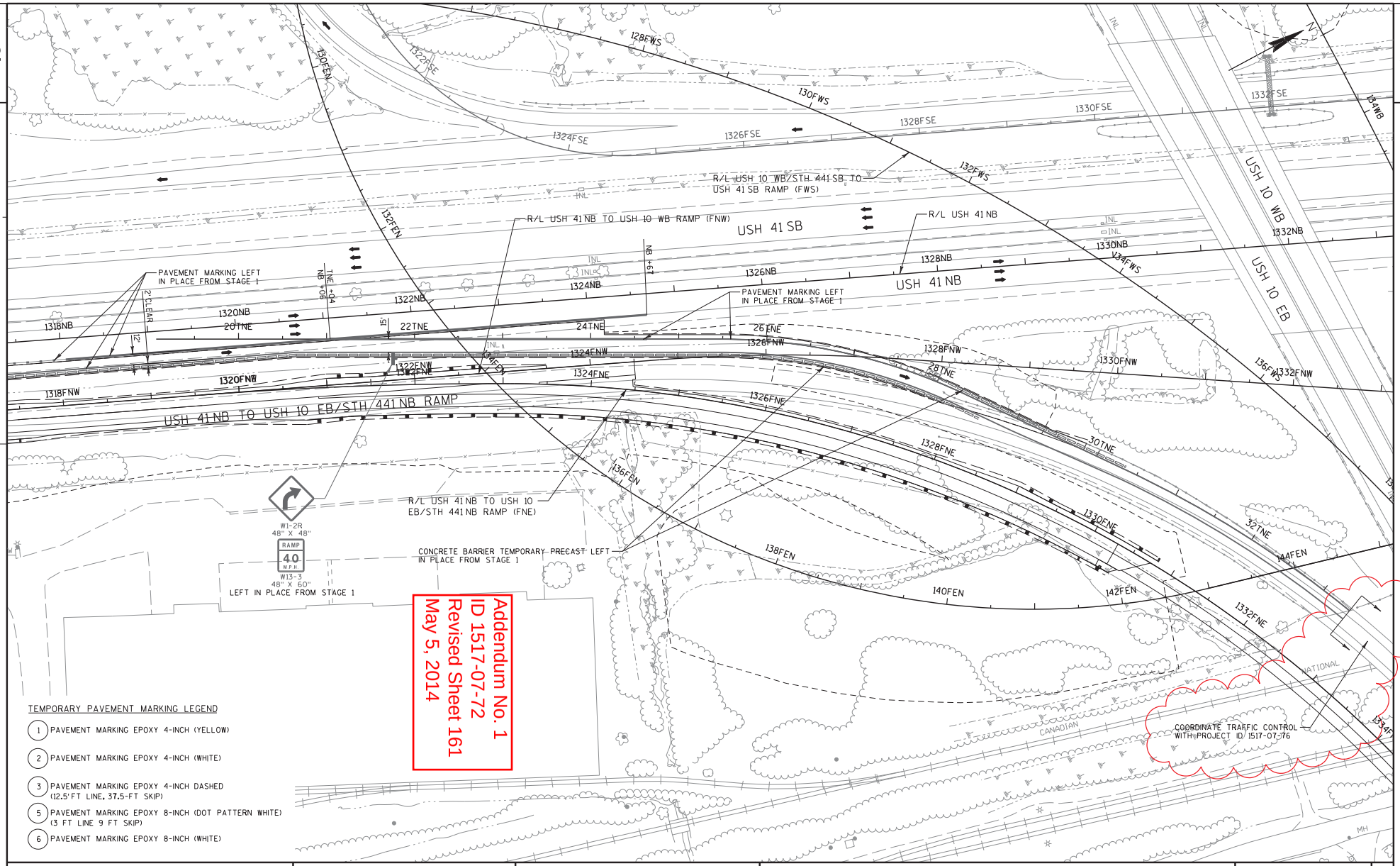

Addendum No. 1
ID 1517-07-72
Revised Sheet 161
May 5, 2014

TEMPORARY PAVEMENT MARKING LEGEND

1. PAVEMENT MARKING EPOXY 4-INCH (YELLOW)
2. PAVEMENT MARKING EPOXY 4-INCH (WHITE)
3. PAVEMENT MARKING EPOXY 4-INCH DASHED (12.5'FT LINE, 37.5-FT SKIP)
5. PAVEMENT MARKING EPOXY 8-INCH (DOT PATTERN WHITE) (3 FT LINE 9 FT SKIP)
6. PAVEMENT MARKING EPOXY 8-INCH (WHITE)

PROJECT NO: 1517-07-72	HWY: USH 10	COUNTY: WINNEBAGO	TRAFFIC CONTROL LEFT IN PLACE PLAN: SHEET 2	SHEET 161	E

FILE NAME : S:\DOT\DOT_NE\120012-Tri County Freeway\1517-07-72\DGN_Files\Plansheets\025086_tc.dgn PLOT DATE : 4/23/2014 PLOT BY : wally_w PLOT NAME : PLOT SCALE : 1:100 WISDOT/CADDS SHEET 42

2

BENCHMARKS			
NUMBER	LOCATION	DESCRIPTION	ELEVATION
CS-1	STA 100WB+56.22, 538.49'RT	NW FLANGE BOLT ON HYD IN SE QUAD OF COLDSPRING ROAD AND WESTFIELD	772.51
CS-2	STA 99WB+23.66, 469.3'LT	NE FLANGE BOLT ON HYD IN NW QUAD OF COLDSPRING ROAD AND W AMERICAN DRIVE	773.26
AM-1	STA 105WB+21.00, 475.4'LT	FLANGE BOLT ON FIRST HYD ON NORTH SIDE OF AMERICAN DRIVE EAST OF COLDSPRING ROAD	771.60
AM-2	STA 110WB+16.68, 472.9'LT	FLANGE BOLT ON SECOND HYD ON NORTH SIDE OF AMERICAN DRIVE EAST OF COLDSPRING ROAD	771.22
AM-3	STA 1363FNW+18.38, 392.1'RT	FLANGE BOLT ON FIRST HYD ON NORTH SIDE OF AMERICAN DRIVE EAST OF DELTA DRIVE	769.07
AM-4	STA 1357FNW+69.57, 330.9'RT	FLANGE BOLT ON SECOND HYD ON NORTH SIDE OF AMERICAN DRIVE EAST OF DELTA DRIVE	766.74

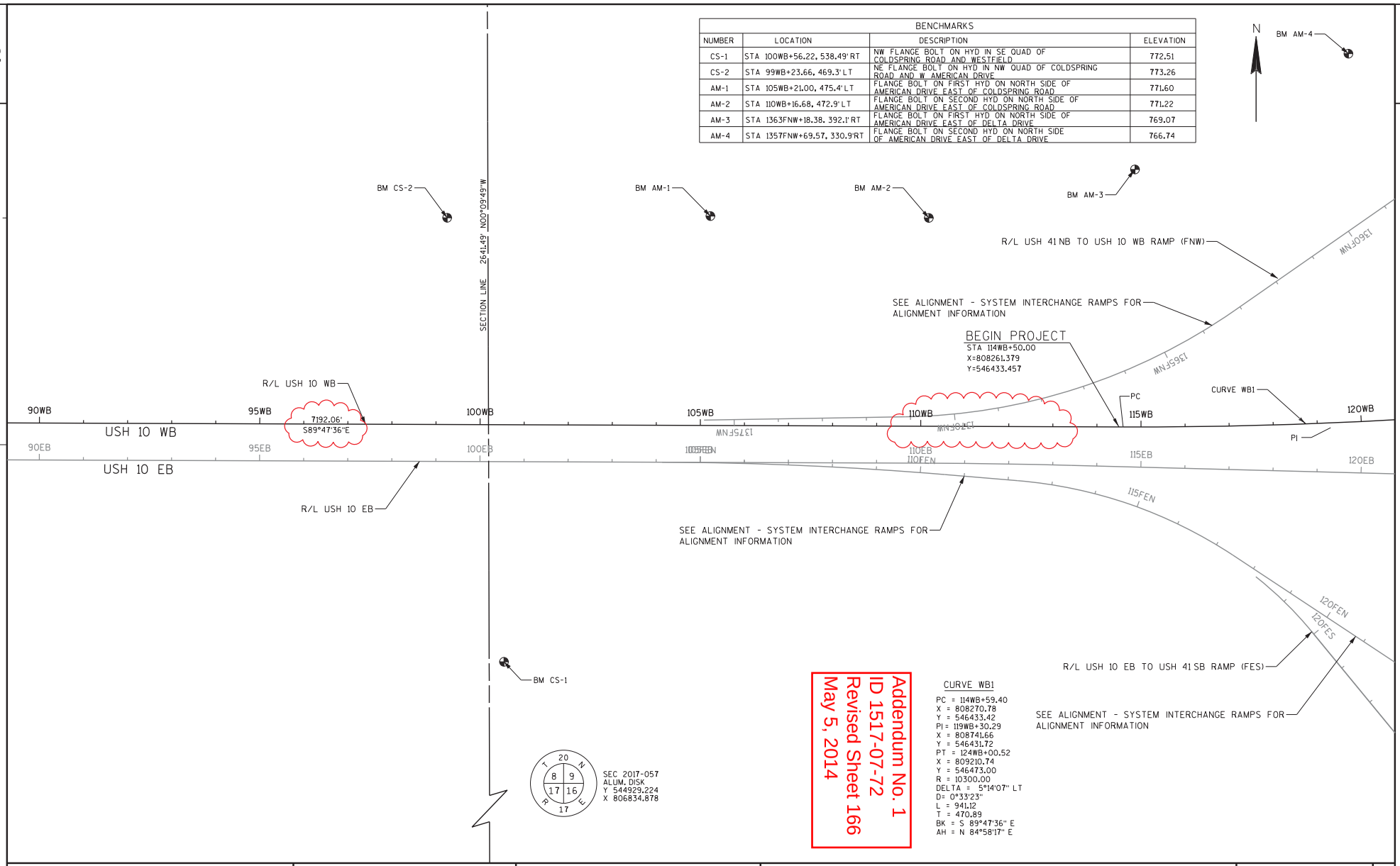

Addendum No. 1
ID 1517-07-72
Revised Sheet 166
May 5, 2014

CURVE WB1

PC = 114WB+59.40
X = 808270.78
Y = 546433.42
PI = 119WB+30.29
X = 808741.66
Y = 546431.72
PT = 124WB+00.52
X = 809210.74
Y = 546473.00
R = 10300.00
DELTA = 5°14'07" LT
D= 0°33'23"
L = 941.12
T = 470.89
BK = S 89°47'36" E
AH = N 84°58'17" E

2

PROJECT NO: 1517-07-72	HWY: USH 10	COUNTY: WINNEBAGO	ALIGNMENT - USH 10 WB	SHEET 166	E

FILE NAME : S:\DOT\DOT_NE\120012-Tri County Freeway\1517-07-72\DGN_Files\Plansheets\027201_ad.dgn PLOT DATE : 4/24/2014 PLOT BY : wally_w PLOT NAME : PLOT SCALE : 1:200

WISDOT/CADDS SHEET 42

2

CURVE FNW1
PC = 1306FNW+10.01
X = 809262.23
Y = 544005.89
PI = 1309FNW+31.39
X = 809393.51
Y = 544299.22
PT = 1312FNW+52.42
X = 809547.74
Y = 544581.17
R = 8060.00
DELTA = 4°34'00" RT
D= 0°42'39"
L = 642.41
T = 321.37
BK = N 24°06'43" E
AH = N 28°40'43" E

CURVE FNW2
PC = 1314FNW+22.44
X = 809629.33
Y = 544730.34
PI = 1315FNW+84.73
X = 809707.21
Y = 544872.71
PT = 1317FNW+46.84
X = 809773.51
Y = 545020.83
R = 4070.00
DELTA = 4°34'00" LT
D= 1°24'28"
L = 324.39
T = 162.28
BK = N 28°40'43" E
AH = N 24°06'43" E

CURVE FNW3
PC = 1324FNW+78.85
X = 810072.55
Y = 545688.98
PI = 1326FNW+12.74
X = 810127.25
Y = 545811.18
PT = 1327FNW+46.16
X = 810198.88
Y = 545924.29
R = 1860.00
DELTA = 8°14'04" RT
D= 3°04'50"
L = 267.31
T = 133.89
BK = N 24°06'43" E
AH = N 32°20'47" E

CURVE FEN3
PC = 126FEN+86.41
X = 809305.86
Y = 545622.42
PI = 138FEN+68.34
X = 810291.73
Y = 544970.48
PT = 142FEN+98.28
X = 810597.96
Y = 546112.05
R = 851.50
DELTA = 108°27'34" LT
D= 6°43'44"
L = 1611.87
T = 1181.93
BK = S 56°31'26" E
AH = N 15°01'00" E

CURVE FNE1
PC = 1319FNE+57.14
X = 809859.42
Y = 545212.79
PI = 1321FNE+32.58
X = 809931.09
Y = 545372.92
PCC = 1323FNE+07.83
X = 810015.29
Y = 545526.84
R = 4400.00
DELTA = 4°34'00" RT
D= 1°18'08"
L = 350.69
T = 175.44
BK = N 24°06'43" E
AH = N 28°40'43" E

CURVE FNE2
PC = 1323FNE+07.83
X = 810015.29
Y = 545526.84
PI = 1331FNE+30.30
X = 810409.98
Y = 546248.40
PT = 1337FNE+98.17
X = 811232.31
Y = 546263.38
R = 1416.60
DELTA = 60°16'41" RT
D= 4°02'41"
L = 1490.33
T = 822.46
BK = N 28°40'43" E
AH = N 88°57'24" E

CURVE FWS1
PC = 103FWS+57.75
X = 808933.82
Y = 543588.94
PI = 107FWS+42.73
X = 809132.98
Y = 543918.40
PT = 111FWS+15.80
X = 809176.59
Y = 544300.91
R = 1762.00
DELTA = 24°39'00" LT
D= 3°15'06"
L = 758.05
T = 384.98
BK = N 31°09'14" E
AH = N 6°30'14" E

CURVE FWS2
PC = 115FWS+42.90
X = 809224.97
Y = 544725.27
PI = 133FWS+28.99
X = 809427.28
Y = 546499.86
PCC = 144FWS+10.02
X = 811210.98
Y = 546407.51
R = 1900.00
DELTA = 86°27'36" RT
D= 3°00'56"
L = 2867.12
T = 1786.09
BK = N 6°30'14" E
AH = S 87°02'11" E

Addendum No. 1
ID 1517-07-72
Revised Sheet 172
May 5, 2014

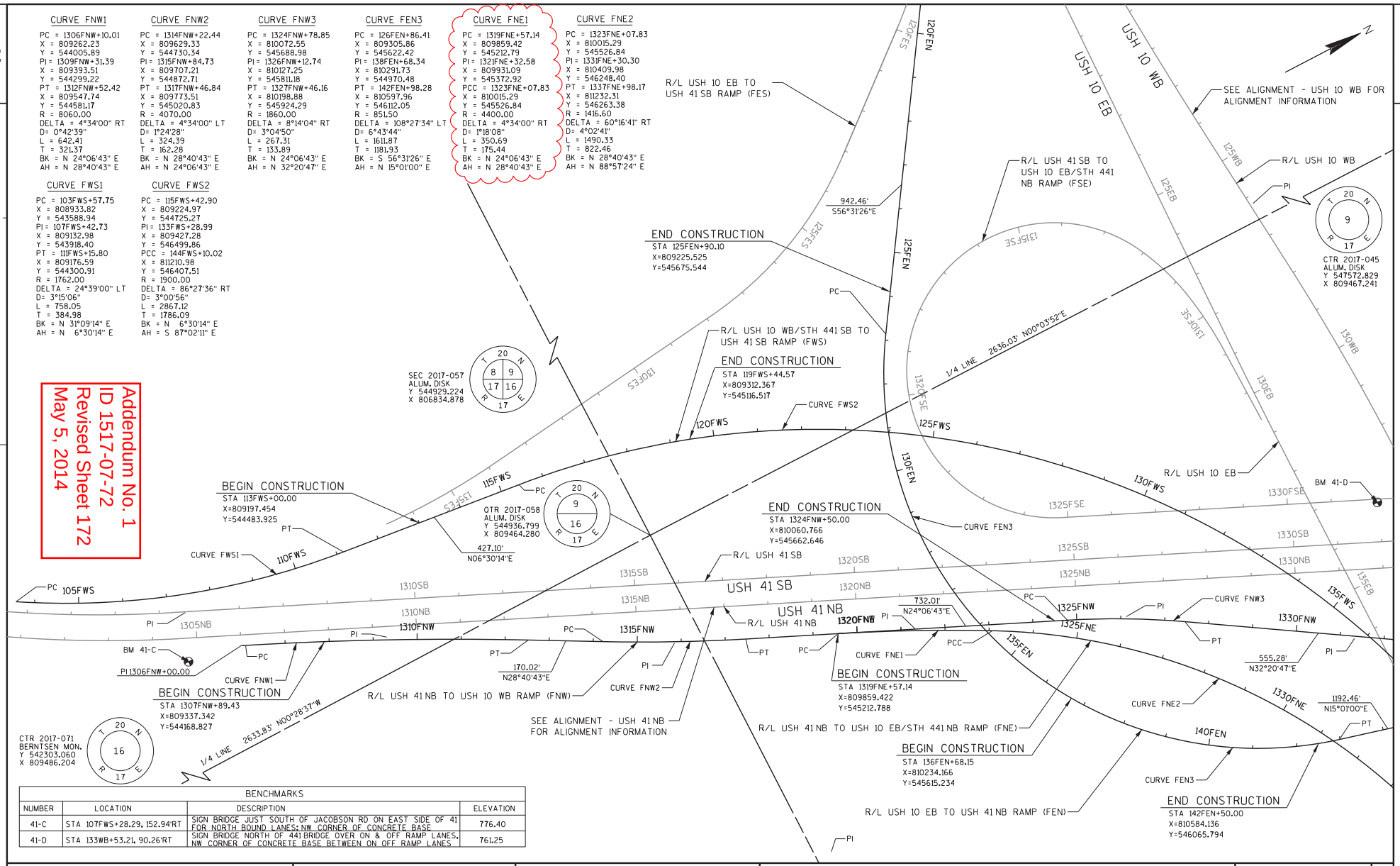

BENCHMARKS			
NUMBER	LOCATION	DESCRIPTION	ELEVATION
41-C	STA 107FWS+28.29, 152.94'RT	SIGN BRIDGE JUST SOUTH OF JACOBSON RD ON EAST SIDE OF 41 FOR NORTH BOUND LANES; NW CORNER OF CONCRETE BASE	776.40
41-D	STA 133WB+53.21, 90.26'RT	SIGN BRIDGE NORTH OF 441 BRIDGE OVER ON & OFF RAMP LANES, NW CORNER OF CONCRETE BASE BETWEEN ON OFF RAMP LANES	761.25

PROJECT NO: 1517-07-72	HWY: USH 10	COUNTY: WINNEBAGO	ALIGNMENT - SYSTEM INTERCHANGE RAMPS	SHEET 172	E

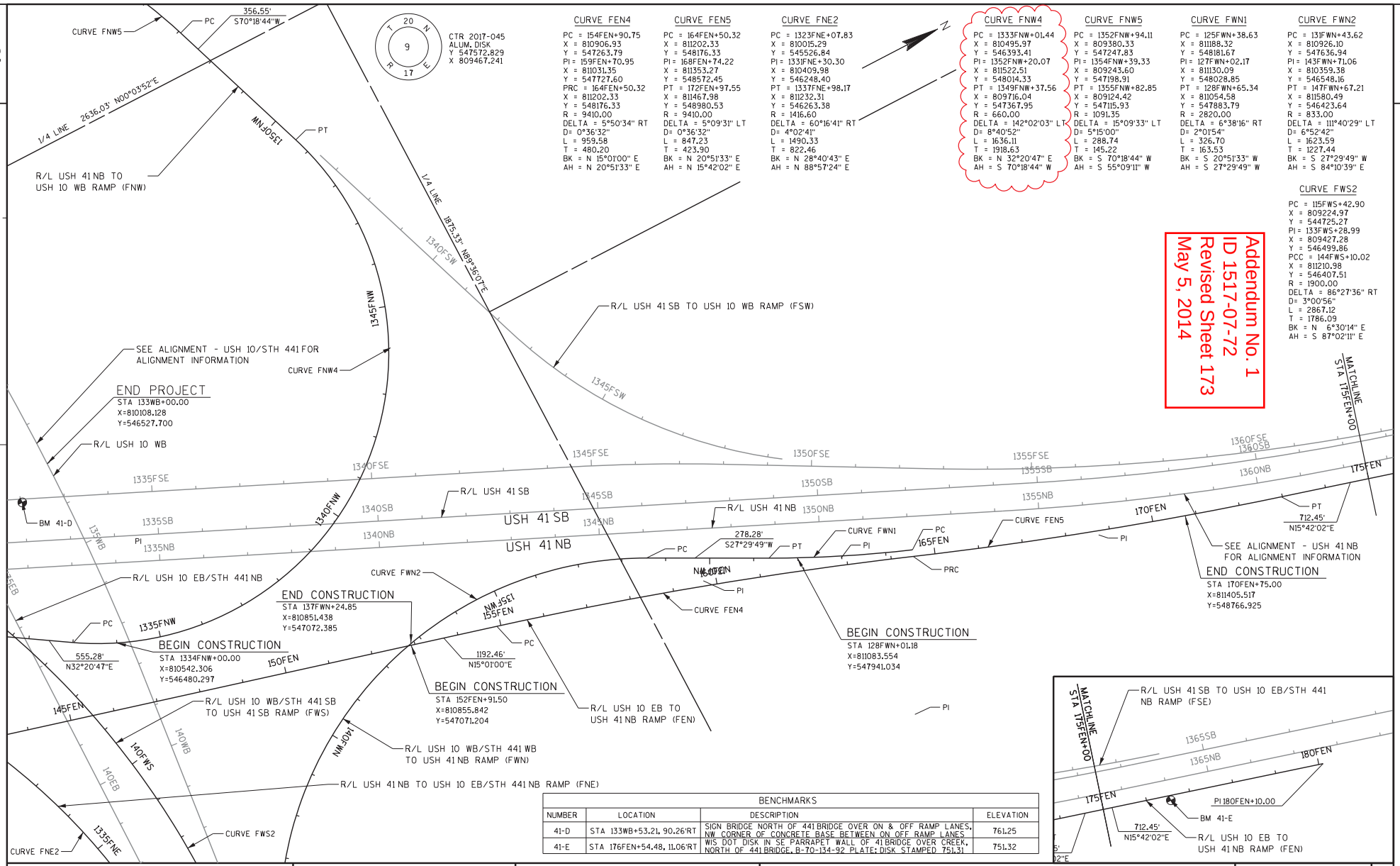

CURVE FEN4
PC = 154FEN+90.75
X = 810906.93
Y = 547263.79
PI = 159FEN+70.95
X = 811031.35
Y = 547727.60
PRC = 164FEN+50.32
X = 811202.33
Y = 548176.33
R = 9410.00
DELTA = 5°50'34" RT
D= 0°36'32"
L = 959.58
T = 480.20
BK = N 15°01'00" E
AH = N 20°51'33" E

CURVE FEN5
PC = 164FEN+50.32
X = 811202.33
Y = 548176.33
PI = 168FEN+74.22
X = 811353.27
Y = 548572.45
PT = 172FEN+97.55
X = 811467.98
Y = 548980.53
R = 9410.00
DELTA = 5°09'31" LT
D= 0°36'32"
L = 847.23
T = 423.90
BK = N 20°51'33" E
AH = N 15°42'02" E

CURVE FNE2
PC = 1323FNE+07.83
X = 810015.29
Y = 545526.84
PI = 1331FNE+30.30
X = 810409.98
Y = 546248.40
PT = 1337FNE+98.17
X = 811232.31
Y = 546263.38
R = 1416.60
DELTA = 60°16'41" RT
D= 4°02'41"
L = 1490.33
T = 822.46
BK = N 28°40'43" E
AH = N 88°57'24" E

CURVE FNW4
PC = 1333FNW+01.44
X = 810495.97
Y = 546393.41
PI = 1352FNW+20.07
X = 811522.51
Y = 548014.33
PT = 1349FNW+37.56
X = 809716.04
Y = 547367.95
R = 660.00
DELTA = 142°02'03" LT
D= 8°40'52"
L = 1636.11
T = 1918.63
BK = N 32°20'47" E
AH = S 70°18'44" W

CURVE FNW5
PC = 1352FNW+94.11
X = 809380.33
Y = 547247.83
PI = 1354FNW+39.33
X = 809243.60
Y = 547198.91
PT = 1355FNW+82.85
X = 809124.42
Y = 547115.93
R = 1091.35
DELTA = 15°09'33" LT
D= 5°15'00"
L = 288.74
T = 145.22
BK = S 70°18'44" W
AH = S 55°09'11" W

CURVE FWN1
PC = 125FWN+38.63
X = 811188.32
Y = 548181.67
PI = 127FWN+02.17
X = 811130.09
Y = 548028.85
PT = 128FWN+65.34
X = 811054.58
Y = 547883.79
R = 2820.00
DELTA = 6°38'16" RT
D= 2°01'54"
L = 326.70
T = 163.53
BK = S 20°51'33" W
AH = S 27°29'49" W

CURVE FWN2
PC = 131FWN+43.62
X = 810926.10
Y = 547636.94
PI = 143FWN+71.06
X = 810359.38
Y = 546548.16
PT = 147FWN+67.21
X = 811580.49
Y = 546423.64
R = 833.00
DELTA = 111°40'29" LT
D= 6°52'42"
L = 1623.59
T = 1227.44
BK = S 27°29'49" W
AH = S 84°10'39" E

CURVE FWS2
PC = 115FWS+42.90
X = 809224.97
Y = 544725.27
PI = 133FWS+28.99
X = 809427.28
Y = 546499.86
PCC = 144FWS+10.02
X = 811210.98
Y = 546407.51
R = 1900.00
DELTA = 86°27'36" RT
D= 3°00'56"
L = 2867.12
T = 1786.09
BK = N 6°30'14" E
AH = S 87°02'11" E

Addendum No. 1
ID 1517-07-72
Revised Sheet 173
May 5, 2014

BENCHMARKS

NUMBER	LOCATION	DESCRIPTION	ELEVATION
41-D	STA 133WB+53.21, 90.26'RT	SIGN BRIDGE NORTH OF 441 BRIDGE OVER ON & OFF RAMP LANES, NW CORNER OF CONCRETE BASE BETWEEN ON OFF RAMP LANES	761.25
41-E	STA 176FEN+54.48, 11.06'RT	WIS DOT DISK IN SE PARRAPET WALL OF 41 BRIDGE OVER CREEK, NORTH OF 441 BRIDGE, B-70-134-92 PLATE: DISK STAMPED 751.31	751.32

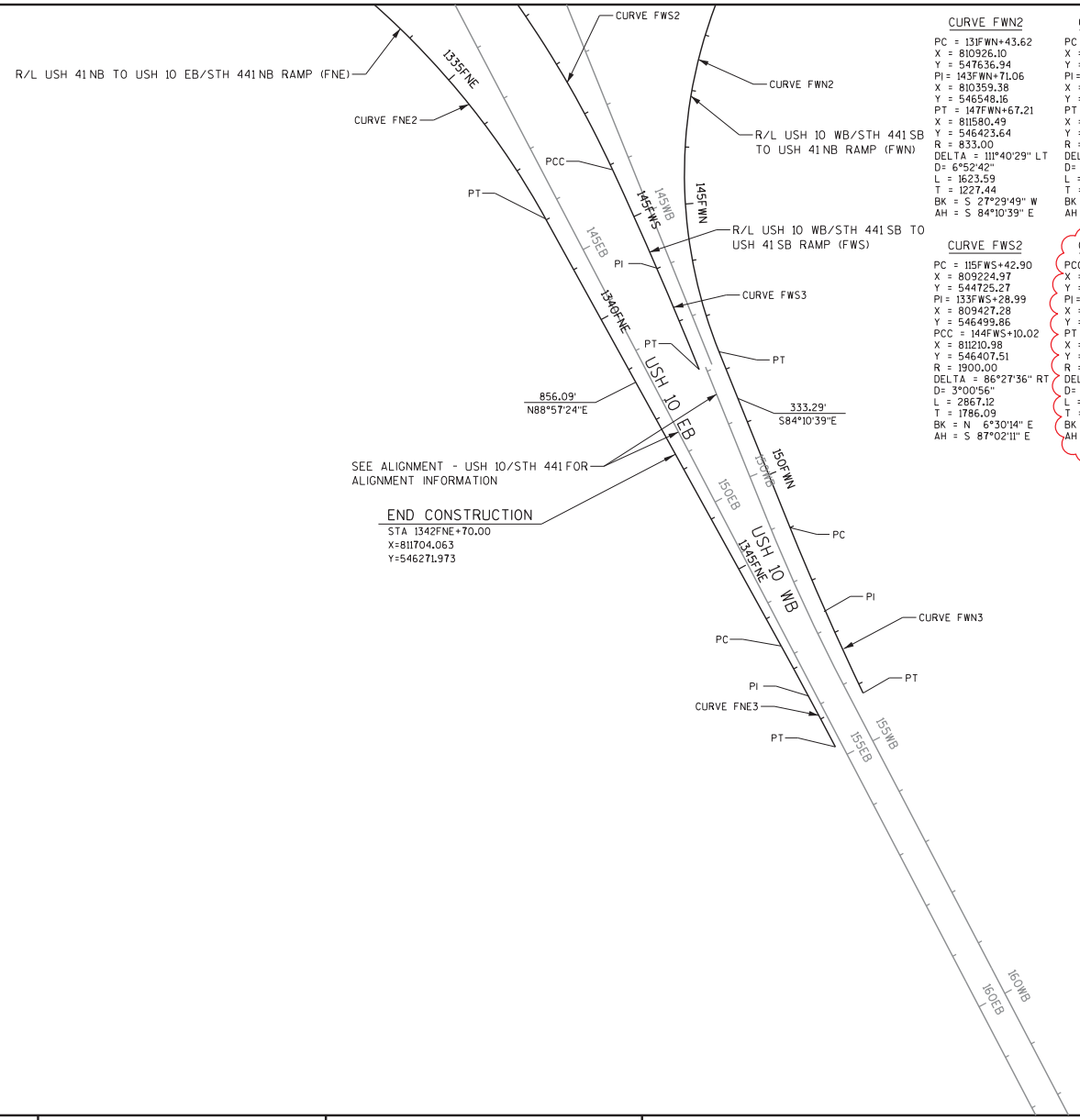

CURVE FWN2

PC = 131FWN+43.62
X = 810926.10
Y = 547636.94
PI = 143FWN+71.06
X = 810359.38
Y = 546548.16
PT = 147FWN+67.21
X = 811580.49
Y = 546423.64
R = 833.00
DELTA = 111°40'29" LT
D= 6°52'42"
L = 1623.59
T = 1227.44
BK = S 27°29'49" W
AH = S 84°10'39" E

CURVE FWN3

PC = 151FWN+00.51
X = 811912.06
Y = 546389.83
PI = 152FWN+59.14
X = 812069.88
Y = 546373.74
PT = 154FWN+17.67
X = 812228.40
Y = 546367.65
R = 5015.00
DELTA = 3°37'25" LT
D= 1°08'33"
L = 317.16
T = 158.63
BK = S 84°10'39" E
AH = S 87°48'04" E

CURVE FNE2

PC = 1323FNE+07.83
X = 810015.29
Y = 545526.84
PI = 1331FNE+30.30
X = 810409.98
Y = 546248.40
PT = 1337FNE+98.17
X = 811232.31
Y = 546263.38
R = 1416.60
DELTA = 60°16'41" RT
D= 4°02'41"
L = 1490.33
T = 822.46
BK = N 28°40'43" E
AH = N 88°57'24" E

CURVE FNE3

PC = 1346FNE+54.41
X = 812088.41
Y = 546278.97
PI = 1347FNE+54.83
X = 812188.81
Y = 546280.80
PT = 1348FNE+55.24
X = 812289.23
Y = 546280.42
R = 9130.00
DELTA = 1°15'37" RT
D= 0°37'39"
L = 200.83
T = 100.42
BK = N 88°57'24" E
AH = S 89°46'59" E

CURVE FWS2

PC = 115FWS+42.90
X = 809224.97
Y = 544725.27
PI = 133FWS+28.99
X = 809427.28
Y = 546499.86
PCC = 144FWS+10.02
X = 811210.98
Y = 546407.51
R = 1900.00
DELTA = 86°27'36" RT
D= 3°00'56"
L = 2867.12
T = 1786.09
BK = N 6°30'14" E
AH = S 87°02'11" E

CURVE FWS3

PCC = 144FWS+10.02
X = 811210.98
Y = 546407.51
PI = 146FWS+01.16
X = 811401.85
Y = 546397.63
PT = 147FWS+92.21
X = 811592.00
Y = 546378.24
R = 7660.00
DELTA = 2°51'31" RT
D= 0°44'53"
L = 382.19
T = 191.13
BK = S 87°02'11" E
AH = S 84°10'39" E

Addendum No. 1
ID 1517-07-72
Revised Sheet 174
May 5, 2014

PROJECT NO: 1517-07-72	HWY: USH 10	COUNTY: WINNEBAGO	ALIGNMENT - SYSTEM INTERCHANGE RAMPS	SHEET 174	E

3

CLEARING & GRUBBING

STATION	-	STATION	OFFSET	LOCATION	201.0105 CLEARING STA	201.0205 GRUBBING STA	REMARKS
117WB+00	-	120WB+00	LT/RT	USH 10 WB	3	3	
122WB+00	-	133WB+00	LT/RT	USH 10 WB	11	11	
1362NB+00	-	1373NB+00	RT	USH 41 NB	11	11	
1380NB+00	-	1385NB+00	RT	USH 41 NB	5	5	
119FEN+00	-	127FEN+00	RT/LT	FEN RAMP	8	8	
136FEN+00	-	143FEN+00	RT/LT	FEN RAMP	7	7	
152FEN+00	-	157FEN+00	RT/LT	FEN RAMP	5	5	
162FEN+00	-	170FEN+00	RT	FEN RAMP	8	8	
1321FNE+00	-	1330FNE+00	RT	FNE RAMP	9	9	
1335FNE+00	-	1343FNE+00	RT	FNE RAMP	8	8	
1307FNW+00	-	1309FNW+00	RT	FNW RAMP	2	2	
1313FNW+00	-	1319FNW+00	RT	FNW RAMP	6	6	
1327FNW+00	-	1330FNW+00	RT/LT	FNW RAMP	3	3	
1334FNW+00	-	1338FNW+00	RT	FNW RAMP	4	4	
1335FNW+00	-	1339FNW+00	RT	FNW RAMP	4	4	TWN RAMP
1344FNW+00	-	1360FNW+00	LT	FNW RAMP	16	16	POND & DITCH 2
115FWS+00	-	120FWS+00	RT/LT	FWS RAMP	5	5	
180EB+00	-	184EB+00	RT	USH 10 EB / STH 441 NB	4	4	
PROJECT 1517-07-72 TOTAL					119	119	

~~REMOVING CONCRETE BARRIER~~

~~STATION~~	~~-~~	~~STATION~~	~~OFFSET~~	~~LOCATION~~	~~201.0157 REMOVING CONCRETE BARRIER LF~~
~~182EB+81~~	~~-~~	~~182EB+93~~	~~RT~~	~~USH 10 EB/STH 441 NB~~	~~0~~
~~PROJECT 1517-07-72 TOTAL~~					~~0~~

3

REMOVING SMALL PIPE CULVERTS

STATION	OFFSET	-	STATION	OFFSET	LOCATION	203.0100 REMOVING SMALL PIPE CULVERTS EACH	REMARKS
122WB+88	32.8' RT	-	122WB+91	1.2' LT	USH 10 WB	1	34 LF REINFORCED CONCRETE CULVERT PIPE, 24"
1329FNE+38	22.3' LT	-	1329FNE+41	17.1' RT	FNE RAMP	1	40 LF REINFORCED CONCRETE CULVERT PIPE, 24"
PROJECT 1517-07-72 TOTAL						2	

REMOVING PAVEMENT

FROM STATION	OFFSET	TO STATION	OFFSET	LOCATION	204.0100 REMOVING PAVEMENT SY	204.0110 REMOVING ASPHALTIC SURFACE SY	REMARKS
1351NB+40	RT	1359NB+67	RT	USH 41 NB	304	0	
119FEN+92	RT	121FEN+99	RT	FEN RAMP	288	0	
1322FNE+26	RT	1324FNE+06	RT	FNE RAMP	0	506	
1307FNW+90	RT/LT	1327FNW+98	RT	FNW RAMP	4,553	0	
1344FNW+55	LT	1344FNW+98	LT	FNW RAMP	45	0	EXIST FWS RAMP
1353FNW+92	LT	1354FNW+31	LT	FNW RAMP	36	0	EXIST FWS RAMP
129FWN+97	RT	136FWN+63	RT	FWN RAMP	1,072	0	EXIST FWN RAMP
~~182EB+81~~	~~RT~~	~~182EB+93~~	~~RT~~	~~USH 10 EB/STH 441 NB~~	~~0~~	~~0~~	~~EXIST FWN RAMP~~
PROJECT 1517-07-72 TOTAL					6,298	506	

REMOVING FENCE

STATION	-	STATION	OFFSET	LOCATION	204.0170 REMOVING FENCE LF
1363NB+76	-	1364NB+03	RT	USH 41 NB	46
1364NB+72	-	1387NB+13	RT	USH 41 NB	2,254
152FEN+92	-	155FEN+82	RT	FEN RAMP	289
163FEN+13	-	171FEN+85	RT	FEN RAMP	877
1321FNE+40	-	1332FNE+50	RT	FNE RAMP	1,183
1335FNE+50	-	1342FNE+21	RT	FNE RAMP	657
1336FNE+20	-	1336FNE+26	RT/LT	FNE RAMP	135
1341FNE+02	-	1341FNE+17	RT/LT	FNE RAMP	152
1314FNW+12	-	1318FNW+39	RT	FNW RAMP	437
117FWS+63	-	118FWS+79	RT	FWS RAMP	121
180EB+10	-	183EB+13	RT/LT	USH 10 EB / STH 441 NB	81
180EB+10	-	183EB+87	RT	USH 10 EB / STH 441 NB	395
183EB+80	-	183EB+87	RT	USH 10 EB / STH 441 NB	67
PROJECT 1517-07-72 TOTAL					6,694

Addendum No. 1
ID 1517-07-72
Revised Sheet 184
May 5, 2014

ALL ITEMS ARE CATEGORY **1000** UNLESS OTHERWISE SPECIFIED.

3

REMOVING INLETS

STATION	OFFSET	LOCATION	204.0220 REMOVING INLETS EACH
1315NB+93	56' RT	USH 41 NB	1
1322NB+93	53' RT	USH 41 NB	1
1363NB+93	46' RT	USH 41 NB	1
PROJECT 1517-07-72 TOTAL			3

REMOVING DELINEATORS AND MARKERS

LOCATION	204.0180 REMOVING DELINEATORS AND MARKERS EACH
UNDISTRIBUTED	50
PROJECT 1517-07-72 TOTAL	50

3

REMOVING STORM SEWER

STATION	OFFSET	-	STATION	OFFSET	LOCATION	204.0245.001 REMOVING STORM SEWER 12-INCH-18-INCH LF	204.0245.002 REMOVING STORM SEWER 21-INCH-30-INCH LF
1315NB+93	56.2' RT	-	1315NB+93	135.5' RT	USH 41 NB	79	--
1322NB+84	137.5' RT	-	1322NB+93	53.0' RT	USH 41 NB	83	--
1361NB+20	55.7' RT	-	1361NB+20	65.4' RT	USH 41 NB	--	10
1363NB+92	73.0' RT	-	1363NB+93	45.7 FT	USH 41 NB	27	--
166FEN+29	47.4' RT	-	166FEN+36	35.9' LT	FEN RAMP	84	--
169FEN+46	17.1' LT	-	169FEN+43	14.7' RT	FEN RAMP	32	---
125FWN+96	26.0' RT	-	125FWN+97	3.7' RT	FWN RAMP	22	---
133FWN+53	59.2' LT	-	133FWN+54	21.6' RT	FWN RAMP	--	81
179EB+72	39.1' RT	-	183EB+91	118.7' RT	USH 10 EB / STH 441 NB	--	441
182EB+77	75.6' RT	-	182EB+90	5.1' RT	USH 10 EB / STH 441 NB	72	--
PROJECT 1517-07-72 TOTAL						399	532

~~REMOVING INLET COVER AND CASTING~~

~~STATION~~	~~OFFSET~~	~~LOCATION~~	~~204.9060.S.002 REMOVING INLET COVER AND CASTING EACH~~
~~182EB+87~~	~~RT~~	~~USH 10 EB/STH 441 NB~~	~~--~~
~~PROJECT 1517-07-72 TOTAL~~			~~--~~

REMOVING CONCRETE APRON ENDWALL FOR PIPE UNDERDRAIN

LOCATION	204.9060.S.001 REMOVING CONCRETE APRON ENDWALL FOR PIPE UNDERDRAIN EACH
UNDISTRIBUTED	20
PROJECT 1517-07-72 TOTAL	20

REMOVING UNDERDRAIN

LOCATION	204.9090.S.001 REMOVING UNDERDRAIN LF
UNDISTRIBUTED	100
PROJECT 1517-07-72 TOTAL	100

UNDERDRAIN REMOVED DURING EXCAVATION COMMON IS INCIDENTAL TO BID ITEM EXCAVATION COMMON.

Addendum No. 1
ID 1517-07-72
Revised Sheet 185
May 5, 2014

ALL ITEMS ARE CATEGORY **1000** UNLESS OTHERWISE SPECIFIED.

3

EARTHWORK

Category	Stage	From/To Station	Location	Excavation Common (CY) (1) 205.0100		Structure Excavation (CY) (6)	Fill (CY)	Structure Fill (CY) (6)	Roadway Embankment (CY) (4) SPV.0035.010	Mass Ordinate +/- (5)
				Cut (CY) (2)	EBS (CY) (3)					
1000	1	114WB+50.00 to 133WB+00.00	USH 10 WB	2,205	0	0	166,690	0	166,690	-164,485
		1310NB+79.24 to 1320NB+66.49	USH 41 NB 1	1,271	0	0	34	0	34	1,237
		1356NB+51.55 to 1364NB+14.26	USH 41 NB 2	2,552	0	1,266	31	23	8	2,521
		1364NB+74.15 to 1387NB+39.79	USH 41 NB 3	5,329	0	824	183	27	156	5,145
		118FEN+50.00 to 125FEN+65.00	FEN RAMP 1	2,246	0	0	12,827	0	12,827	-10,581
		136FEN+66.00 to 142FEN+50.00	FEN RAMP 2	1,182	0	0	27,156	0	27,156	-25,974
		152FEN+92.00 to 170FEN+75.00	FEN RAMP 3	11,675	1,400	389	1,113	190	2,323	10,562
		1323FNE+20.00 to 1331FNE+10.00	FNE RAMP 1	450	0	290	24,832	1,374	23,458	-24,382
		1335FNE+25 to 1342FNE+70	FNE RAMP 2	875	0	0	75,261	0	75,261	-74,385
		1307FNW+90.21 to 1324FNW+50	FNW RAMP	22,800	0	0	89	0	89	22,711
		1334FNW+00.00 to 1338FNW+00.00	FNW RAMP	10,893	0	0	5,968	0	5,968	4,924
		128FWN+01.18 to 136FWN+81.76	FWN RAMP	475	0	641	7,138	1,203	5,934	-6,662
		113FWS+00.00 to 119FWS+44.57	FWS RAMP	23	0	0	23,243	0	23,243	-23,220
		50DPB+00.00 to 59DPB+06.74	POND 1	17,539	0	0	215	0	215	17,324
		10+00.00 to 11+67.00	DITCH 1	657	0	0	0	0	0	657
		20+00.00 to 26+09.33	DITCH 2	5,218	0	0	0	0	0	5,218
		20TNE+65.75 to 29TNE+83.16	TNE RAMP	1,182	0	0	1,648	0	1,648	-466
		35TWN+57.48 to 47TWN+50.00	TWN RAMP	980	0	0	5,986	0	5,986	-5,006
		179EB+63 to 183EB+75	USH 10 EB/ STH 441 NB	1,523	0	0	6,909	0	6,909	-5,386
				89,077	1,400	3,411	359,325	2,819	357,907	-270,248
	Project 1517-07-72 Total			90,477					357,907	

1) Excavation Common = Cut + EBS Excavation.
2) Cut volume includes concrete and asphaltic surface material.
3) EBS Excavation to be backfilled roadway embankment unless otherwise noted in plans.
4) Roadway Embankment = (Fill - Structure Fill)
5) The Mass Ordinate: A positive quantity indicates an excess of material and a negative quantity indicates a shortage of material.
Mass Ordinate = Cut - Fill. The Mass Ordinate is for information purposes only as Common Excavation and Roadway Embankment are not balanced for quantity purposes and does not guarantee the quality of Common Excavation, and if it can be reused onsite. All EBS material is assumed to be wasted offsite. Structure Excavation is not included in this calculation.
6) Structure Excavation and Structure Fill limits for Retaining Wall construction are shown in the cross sections and are assumed to be 70% of the retaining wall height if information is not provided as part of wall design.
This is for information purposes only, and will vary depending on shop drawing design.

Addendum No. 1
ID 1517-07-72
Revised Sheet 186
May 5, 2014

ALL ITEMS ARE CATEGORY **1000** UNLESS OTHERWISE SPECIFIED.

3

3

AGGREGATE ITEMS

STATION	OFFSET	LOCATION	305.0110 BASE AGGREGATE DENSE 3/4-INCH TON	305.0120 BASE AGGREGATE DENSE 1 1/4-INCH TON	311.0110 BREAKER RUN TON	REMARKS
PRELIMINARY STAGE						
1308NB+96 - 1319NB+09	RL	USH 41 NB	--	1,308	1195	
19TNE+07 - 29TNE+83	RL	TNE RAMP	95	2,180	2047	
35TWN+42 - 54TWN+27	RL	TWN RAMP	--	2,538	2340	
CONTRACTOR ACCESS			--	5,272	--	
UNDISTRIBUTED			10	603	558	
PRELIMINARY STAGE SUBTOTAL			105	11,901	4945	
STAGE 1						
114WB+50 - 128WB+75	RL	USH 10 WB	--	174	634	
127WB+50 - 133WB+00	RL	USH 10 WB	--	382	1,093	
1356NB+52 - 1364NB+14	RL	USH 41 NB	--	876	2,104	
1364NB+56 - 1387NB+40	RL	USH 41 NB	195	2,794	6,176	
118FEN+50 - 125FEN+90	RL	FEN RAMP	--	658	2,043	
136FEN+66 - 142FEN+50	RL	FEN RAMP	--	760	2,200	
152FEN+92 - 168FEN+97	RL	FEN RAMP	--	2,454	7,344	
1324FNE+48 - 1330FNE+73	RL	FNE RAMP	230	1,902	4,158	
1336FNE+05 - 1338FNE+00	RL	FNE RAMP	--	340	909	
1307FNW+89 - 1324FNW+47	RL	FNW RAMP	715	4,640	10,282	
1334FNW+00 - 1336FNW+75	RL	FNW RAMP	--	456	1,301	
1344FNW+55 - 1344FNW+98	LT	FNW RAMP	--	30	27	EXISTING FWS RAMP
1353FNW+92 - 1354FNW+31	LT	FNW RAMP	--	24	22	EXISTING FWS RAMP
128FWN+01 - 136FWN+82	RL	FWN RAMP	--	1,018	2,776	
113FWS+50 - 119FWS+45	RL	FWS RAMP	--	822	2,390	
~~179EB+63 - 183EB+75~~	~~RT~~	~~USH 10 EB / STH 441 NB~~	~~--~~	~~--~~	~~--~~	
182EB+81 - 182EB+93	RT	USH 10 EB / STH 441 NB	--	--	1,849	
UNDISTRIBUTED			114	1,733	4,346	
STAGE 1 SUBTOTAL			1,254	19,063	49,654	
PROJECT 1517-07-72 TOTAL			1,359	30,964	54,599	

Addendum No. 1
ID 1517-07-72
Revised Sheet 187
May 5, 2014

FINISHING ROADWAY

LOCATION	213.0100 FINISHING ROADWAY PROJECT ID 1517-07-72 EACH
PROJECT 1517-07-72	1
PROJECT 1517-07-72 TOTAL	1

TIE BARS

FROM STATION	OFFSET	TO STATION	OFFSET	LOCATION	416.0610 DRILLED TIE BARS EACH
1356NB+52	RT	1387NB+40	RT	USH 41 NB	1252
1307FNW+89	LT	1313FNW+83	RT	FNW RAMP	241
PROJECT 1517-07-72 TOTAL					1,493

RUMBLE STRIPS

STATION	OFFSET	LOCATION	416.1110 CONCRETE RUMBLE STRIPS SHOULDER LF	465.0400 ASPHALTIC SHOULDER RUMBLE STRIP LF
1372NB+00 - 1390NB+70	LT	USH 41 NB	1,870	--
1364NB+89 - 1387NB+40	RT	USH 41 NB	631	1,623
1307FNW+89 - 1324FNW+00	RT/LT	FNW RAMP	--	2,573
1324FNE+00 - 1330FNE+73	RT/LT	FNE RAMP	--	1,259
1336FNE+33 - 1338FNE+00	RT/LT	FNE RAMP	164	32
PROJECT 1517-07-72 TOTAL			2,665	5,487

ALL ITEMS ARE CATEGORY **1000** UNLESS OTHERWISE SPECIFIED.

3

PAVEMENT ITEMS

STATION	OFFSET	LOCATION	320.0155 CONCRETE BASE 9-INCH SY	415.0070 CONCRETE PAVEMENT 7-INCH SY	SPV.0180.001 MODIFIED HIGH PERFORMANCE CONCRETE (HPC) PAVEMENT 11-INCH SY	415.0410 CONCRETE PAVEMENT APPROACH SLAB SY	455.0105 ASPHALTIC MATERIAL PG58-28 TON	455.0605 TACK COAT GAL	460.1100 HMA PAVEMENT TYPE E-0.3 TON	465.0125 ASPHALTIC SURFACE TEMPORARY TON	REMARKS
PRELIMINARY STAGE											
1308NB+96 - 1319NB+09	RL	USH 41 NB	--	--	--	--	--	--	--	501	
19TNE+07 - 29TNE+83	RL	TNE RAMP	--	--	--	--	--	--	--	822	
35TWN+42 - 54TWN+27	RL	TWN RAMP	--	--	--	--	--	--	--	1,070	
CONTRACTOR ACCESS			--	--	--	--	--	--	--	2,387	
PRELIMINARY STAGE SUBTOTAL			0	0	0	0	0	0	0	4,780	
STAGE 1											
1356NB+52 - 1364NB+01	RL	USH 41 NB	483	--	2,681	--	3	13	59	--	
1364NB+01 - 1364NB+14	RL	USH 41 NB	--	--	--	60	--	--	--	--	
1364NB+56 - 1364NB+89	RL	USH 41 NB	--	--	--	95	--	--	--	--	
1364NB+89 - 1387NB+40	RL	USH 41 NB	--	--	3,440	--	24	--	437	--	
168FEN+75 - 168FEN+97	RL	FEN RAMP	--	--	80	--	--	--	--	--	
1324FNE+48 - 1330FNE+30	RL	FNE RAMP	--	--	1,667	--	14	--	252	--	
1330FNE+30 - 1330FNE+73	RL	FNE RAMP	--	--	--	85	--	--	--	--	
1336FNE+05 - 1336FNE+33	RL	FNE RAMP	--	7	--	62	--	--	--	--	
1336FNE+33 - 1338FNE+00	RL	FNE RAMP	--	--	692	--	--	--	4	--	
1307FNW+89 - 1324FNW+47	RL	FNW RAMP	106	--	5,374	--	31	3	561	--	
1344FNW+55 - 1344FNW+98	LT	FNW RAMP	--	--	--	--	--	--	--	14	EXISTING FWS RAMP
1353FNW+92 - 1354FNW+31	LT	FNW RAMP	--	--	--	--	--	--	--	11	EXISTING FWS RAMP
~~182EB+81 - 182EB+93~~	~~RT~~	~~USH 10 EB/STH 441 NB~~	~~--~~	~~--~~	~~--~~	~~--~~	~~--~~	~~--~~	~~--~~	~~--~~	
STAGE 1 SUBTOTAL			589	7	13,934	302	72	16	1,313	25	
PROJECT 1517-07-72 TOTAL			589	7	13,934	302	72	16	1,313	4,805	

Addendum No. 1
ID 1517-07-72
Revised Sheet 188
May 5, 2014

ALL ITEMS ARE CATEGORY **1000** UNLESS OTHERWISE SPECIFIED.

3

CULVERT PIPES

INLET END				DISCHARGE END						520.8000* CONCRETE COLLARS FOR PIPE	522.1015* APRON ENDWALLS FOR CULVERT PIPE REINFORCED CONCRETE	522.1024*	522.1030*	522.0315 CULVERT PIPE REINFORCED CONCRETE	522.0324	522.0524	522.0530	523.0119 CULVERT PIPE REINFORCED CONCRETE HORIZONTAL ELLIPTICAL CLASS HE-III	523.0519 APRON ENDWALLS FOR CULVERT PIPE REINFORCED CONCRETE HORIZONTAL ELLIPTICAL	611.9800.S PIPE GRATES	633.5200 MARKERS CULVERT END	SPV.0060.104* STORM SEWER PLUG	
														CLASS IV	CLASS IV	CLASS V	CLASS V					
STATION	OFFSET	LOCATION	ELEVATION	STATION	OFFSET	LOCATION	ELEVATION	SLOPE (%)[1]	PIPE[2] LENGTH	EACH	15-INCH EACH	24-INCH EACH	30-INCH EACH	15-INCH LF	24-INCH LF	24-INCH LF	30-INCH LF	19X30- INCH LF	19X30-INCH EACH	EACH	EACH	EACH	REMARKS
124WB+92.28	48.5' RT	USH 10 WB	764.90	124WB+92.28	130.5' LT	USH 10 WB	761.32	2.00	179	---	---	2	---	---	---	167	---	---	---	1	2	---	C
1329FNE+38.18	22.5' LT	FNE RAMP	EXIST	140FEN+41.44	83.5' RT	FEN RAMP	750.33	0.95	235	1	---	---	1	---	---	---	229	---	---	---	1	---	A,C, 752.56
157FEN+85.90	28.0' LT	FEN RAMP	746.45	157FEN+85.86	51.5' RT	FEN RAMP	744.73	2.16	80	---	---	---	---	---	---	---	---	68	2	---	2	---	B
157FEN+93.88	28.0' LT	FEN RAMP	746.40	157FEN+93.91	51.4' RT	FEN RAMP	744.71	2.13	79	---	---	---	---	---	---	---	---	67	2	---	2	---	B
1336FNW+68.81	65.4' LT	FNW RAMP	752.75	1337FNW+99.61	57.6' RT	FNW RAMP	751.50	0.70	179	---	---	2	---	---	167	---	---	---	---	---	---	2	B,D
25TNE+56.04	36.2' RT	FNW RAMP	758.25	27TNE+97.06	44.5' LT	FNW RAMP	757.02	0.48	254	---	2	---	---	242	---	---	---	---	---	---	2	---	B,D
122WB+88	32.8' RT	USH 10 WB	EXIST	---	---	---	---	---	---	---	---	---	---	---	---	---	---	---	---	---	---	1	E
PROJECT 1517-07-72 TOTAL										1	2	4	1	242	167	167	229	135	4	1	9	3	

1) SLOPE CALCULATED BASED ON "PIPE LENGTH"
2) "PIPE LENGTH" COLUMN SHOWN FOR SLOPE CALCULATION ONLY. "PIPE LENGTH" IS CALCULATED FROM FLOWLINE END OF ENDWALL TO FLOWLINE END OF ENDWALL. NOT INTENDED FOR PAY QUANTITY
A) WHEN CONNECTING TO EXISTING PIPES, CONTRACTOR SHALL FIELD VERIFY EXISTING PIPE SIZES, MATERIALS, AND INVERT ELEVATIONS PRIOR TO MANUFACTURING STRUCTURES.
B) JOINT TIES FOR CONCRETE PIPE SHALL BE PROVIDED AT ALL REINFORCED CONCRETE APRON ENDWALL LOCATIONS. APRON ENDWALLS SHALL BE TIED FOR THE LAST THREE JOINTS AT PIPE ENDS. THE COST OF THESE TIES SHALL BE INCLUDED IN THE CONTRACT PRICE OF THE PIPE.
C) JOINT TIES FOR CONCRETE PIPE SHALL BE PROVIDED AT EACH JOINT IN AREAS WITH PREFABRICATED VERTICAL DRAINS. THE COST OF THESE TIES SHALL BE INCLUDED IN THE CONTRACT PRICE OF THE PIPE.
D) ALL OR PORTION OF PIPE TO BE PLACED IN PRELIMINARY STAGE
E) PLACE STORM SEWER PLUG ON UPSTREAM END OF EXISTING CULVERT PIPE AFTER PARTIAL REMOVAL (SEE REMOVING SMALL PIPE CULVERTS)
*ADDITIONAL QUANTITIES SHOWN ELSEWHERE IN PROJECT 1517-07-72

CULVERT PIPE TEMPORARY

INLET END						520.4012 CULVERT PIPE TEMPORARY 12-INCH
STATION	OFFSET	LOCATION	ELEVATION	DISCHARGE ELEVATION	SLOPE (%)	LF
182EB+90.00	3.9' RT	USH 10 EB	770.00	757.02	4.40	96
PROJECT 1517-07-72 TOTAL						96

Addendum # 1
ID 1517-07-72
Revised Sheet 189
May 2, 2014

ALL ITEMS ARE CATEGORY **1000** UNLESS OTHERWISE SPECIFIED.

STORM SEWER STRUCTURES

ROADWAY	STR NO.	STATION	OFFSET FT	LOCATION	RIM, FLANGE, OR FLOW-LINE ELEV	STR TYPE	COVER	STR[1] DEPTH FT	520.8000*[2] CONCRETE COLLARS FOR PIPE EACH	522.1015* APRON ENDWALLS FOR CULVERT PIPE REINFORCED CONCRETE 15-INCH EACH	522.1024* 24-INCH EACH	522.1030* 30-INCH EACH	522.1036 36-INCH EACH	522.1042 42-INCH EACH	611.0530 MANHOLE COVER TYPE J EACH	611.0627 INLET COVERS TYPE HM EACH	611.0642 INLET COVERS TYPE MS EACH	611.0654 INLET COVERS TYPE V EACH	611.2005 MANHOLES 5-FT DIAMETER EACH	611.2006 MANHOLES 6-FT DIAMETER EACH	611.3004 INLETS 4-FT DIAMETER EACH	611.3220 INLETS 2X2-FT EACH	611.3225 INLETS 2X2.5-FT EACH	611.3230 INLETS 2X3-FT EACH	611.3902 INLETS MEDIAN 2 GRATE EACH	SPV.0060.100 POND OUTLET CONTROL MANHOLE EACH	SPV.0060.104* STORM SEWER PLUG EACH	SPV.0060.107 FLARED END SECTION WITH TRASH RACK EACH	SPV.0060.120* COVER PLATES LEFT IN PLACE EACH	REMARKS
~~USH 10 EB/STH 441 NB~~	~~EX IN2~~	~~182EB+87.00~~	~~10.2~~	~~RT~~	~~N/A~~	~~N/A~~	~~N/A~~	~~N/A~~	~~—~~	~~—~~	~~—~~	~~—~~	~~—~~	~~—~~	~~—~~	~~—~~	~~—~~	~~—~~	~~—~~	~~—~~	~~—~~	~~—~~	~~—~~	~~—~~	~~—~~	~~—~~	~~—~~	~~0~~	
USH 10 EB/STH 441 NB	300	182EB+93.00	124.8	RT	756.19	MH 6-FT	HM	11.56	---	---	---	---	---	---	---	---	---	---	---	1	---	---	---	---	---	---	---	---	1	A,C,H
USH 10 EB/STH 441 NB	300M	179EB+85.00	98.7	RT	746.00	MH 6-FT	HM	2.64	---	---	---	---	---	---	---	---	---	---	---	1	---	---	---	---	---	---	---	---	1	A,C,H
USH 10 EB/STH 441 NB	300P	EB179+71	109.2	RT	N/A	ENDWALL 42	N/A	N/A	---	---	---	---	---	1	---	---	---	---	---	---	---	---	---	---	---	---	---	---	---	B
USH 10 EB/STH 441 NB	301N	183EB+90.00	117.7	RT	755.00	MH 6-FT	HM	10.37	---	---	---	---	---	---	---	---	---	---	---	1	---	---	---	---	---	---	---	---	1	A,C,H
FEN RAMP	400	156FEN+51.14	28.3	LT	N/A	ENDWALL 30	N/A	N/A	---	---	---	1	---	---	---	---	---	---	---	---	---	---	---	---	---	---	---	---	---	B
FEN RAMP	410	160FEN+45.64	47.8	RT	N/A	ENDWALL 24	N/A	N/A	---	---	1	---	---	---	---	---	---	---	---	---	---	---	---	---	---	---	---	---	---	B
FWN RAMP	411	129FWN+48.10	4.0	RT	750.16	IN 4-FT	HM	4.50	---	---	---	---	---	---	---	1	---	---	---	---	1	---	---	---	---	---	---	---	---	D,H
FWN RAMP	412P	129FWN+49.31	9.9	RT	N/A	PLUG	N/A	N/A	---	---	---	---	---	---	---	---	---	---	---	---	---	---	---	---	---	---	---	1	---	---
FEN RAMP	420	163FEN+39.29	51.9	RT	N/A	ENDWALL 24	N/A	N/A	---	---	1	---	---	---	---	---	---	---	---	---	---	---	---	---	---	---	---	---	---	B
FWN RAMP	421	126FWN+50.00	4.0	RT	748.06	MH 5-FT	HM	3.40	---	---	---	---	---	---	---	---	---	---	1	---	---	---	---	---	---	---	---	---	1	D,F
FWN RAMP	422	126FWN+75.14	4.0	RT	748.08	IN 4-FT	HM	2.52	---	---	---	---	---	---	---	---	---	---	---	---	1	---	---	---	---	---	---	---	1	D,F
FWN RAMP	423	126FWN+25.07	4.0	RT	748.06	IN 4-FT	HM	2.53	---	---	---	---	---	---	---	---	---	---	---	---	1	---	---	---	---	---	---	---	1	D,F
FEN RAMP	429	169FEN+45.69	27.6	RT	N/A	ENDWALL 24	N/A	N/A	---	---	1	---	---	---	---	---	---	---	---	---	---	---	---	---	---	---	---	---	---	B
FEN RAMP	430	169FEN+45.69	19.0	RT	748.95	IN 4-FT	V	5.99	---	---	---	---	---	---	---	---	---	1	---	---	1	---	---	---	---	---	---	---	---	E
FEN RAMP	431	169FEN+45.69	17.1	LT	749.89	MH 5-FT	J	6.57	1	---	---	---	---	---	1	---	---	---	1	---	---	---	---	---	---	---	---	---	---	A,C,H
FEN RAMP	432	166FEN+35.51	33.4	LT	750.98	MH 5-FT	J	6.34	1	---	---	---	---	---	1	---	---	---	1	---	---	---	---	---	---	---	---	---	---	A,C,H
FEN RAMP	433	163FEN+93.84	41.8	LT	750.89	MH 5-FT	J	4.62	1	---	---	---	---	---	1	---	---	---	1	---	---	---	---	---	---	---	---	---	---	A,C,H
FEN RAMP	434	166FEN+35.51	16.0	LT	749.56	IN 2X3-FT	HM	3.68	---	---	---	---	---	---	---	---	---	---	---	---	---	---	---	1	---	---	---	---	1	D,F
FEN RAMP	440	171FEN+72.03	23.9	RT	N/A	ENDWALL 15	N/A	N/A	---	1	---	---	---	---	---	---	---	---	---	---	---	---	---	---	---	---	---	---	---	B
FEN RAMP	441	171FEN+72.03	19.0	RT	748.20	IN 2X2.5-FT	V	5.83	---	---	---	---	---	---	---	---	---	1	---	---	---	---	1	---	---	---	---	---	---	E
FEN RAMP	450	173FEN+69.31	24.0	RT	N/A	ENDWALL 24	N/A	N/A	---	---	1	---	---	---	---	---	---	---	---	---	---	---	---	---	---	---	---	---	---	B
FEN RAMP	451	173FEN+69.31	19.0	RT	748.21	IN 4-FT	V	6.41	1	---	---	---	---	---	---	---	---	1	---	---	1	---	---	---	---	---	---	---	---	A,E
FEN RAMP	460	175FEN+25.37	25.7	RT	N/A	ENDWALL 15	N/A	N/A	---	1	---	---	---	---	---	---	---	---	---	---	---	---	---	---	---	---	---	---	---	B
FEN RAMP	461	175FEN+25.37	19.0	RT	747.96	IN 2X2.5-FT	V	6.59	---	---	---	---	---	---	---	---	---	1	---	---	---	---	1	---	---	---	---	---	---	E
FEN RAMP	470	178FEN+25.37	25.7	RT	N/A	ENDWALL 15	N/A	N/A	---	1	---	---	---	---	---	---	---	---	---	---	---	---	---	---	---	---	---	---	---	B
FEN RAMP	471	178FEN+25.37	19.0	RT	748.11	IN 2X2.5-FT	V	5.26	---	---	---	---	---	---	---	---	---	1	---	---	---	---	1	---	---	---	---	---	---	E
FEN RAMP	480	180FEN+00.00	23.8	RT	N/A	ENDWALL 15	N/A	N/A	---	1	---	---	---	---	---	---	---	---	---	---	---	---	---	---	---	---	---	---	---	B
FEN RAMP	481	180FEN+00.00	19.0	RT	749.17	IN 2X2.5-FT	V	3.55	---	---	---	---	---	---	---	---	---	1	---	---	---	---	1	---	---	---	---	---	---	E
FNW RAMP	500	1315FNW+93.80	72.6	RT	N/A	ENDWALL 24	N/A	N/A	---	---	1	---	---	---	---	---	---	---	---	---	---	---	---	---	---	---	---	---	---	B
FNW RAMP	501	1315FNW+93.81	15.6	LT	763.11	MEDIAN 2	MS	3.61	1	---	---	---	---	---	---	---	2	---	---	---	---	---	---	---	1	---	---	---	---	A,C,G
FNE RAMP	510	1322FNE+15.00	62.9	RT	N/A	ENDWALL 24	N/A	N/A	---	---	1	---	---	---	---	---	---	---	---	---	---	---	---	---	---	---	---	---	---	B
FNE RAMP	511	1322FNE+15.00	25.1	LT	759.37	MEDIAN 2	MS	4.14	---	---	---	---	---	---	---	---	2	---	---	---	---	---	---	---	1	---	---	---	---	C,G,I
FNE RAMP	530	1336FNE+23.60	50.6	RT	N/A	ENDWALL 15	N/A	N/A	---	1	---	---	---	---	---	---	---	---	---	---	---	---	---	---	---	---	---	---	---	B
FNE RAMP	531	1336FNE+23.60	34.0	RT	788.53	IN 2X2.5-FT	V	2.95	---	---	---	---	---	---	---	---	---	1	---	---	---	---	1	---	---	---	---	---	---	D
FNE RAMP	532	1336FNE+13.36	34.0	RT	788.47	IN 2X2.5-FT	V	1.72	---	---	---	---	---	---	---	---	---	1	---	---	---	---	1	---	---	---	---	---	---	D
FNE RAMP	533	1336FNE+09.37	12.1	LT	779.50	IN 2X2-FT	V	3.30	---	---	---	---	---	---	---	---	---	1	---	---	---	1	---	---	---	---	---	---	---	C
FNW RAMP	632	1345FNW+46.42	250.8	LT	N/A	ENDWALL 36	N/A	N/A	---	---	---	---	1	---	---	---	---	---	---	---	---	---	---	---	---	---	---	---	---	B
FNW RAMP	632P	1344FNW+50.85	150.6	LT	N/A	PLUG	N/A	N/A	---	---	---	---	---	---	---	---	---	---	---	---	---	---	---	---	---	---	---	1	---	---
USH 10 WB	633	126WB+86.41	478.8	LT	N/A	ENDWALL 36	N/A	N/A	---	---	---	---	1	---	---	---	---	---	---	---	---	---	---	---	---	---	---	---	---	B
POND 1	634	58DPB+32.82	3.3	LT	N/A	POND 1 OUTLET	NA	N/A	---	---	---	---	---	---	---	---	---	---	---	---	---	---	---	---	---	---	1	---	1	---	SEE DETAIL
POND 1	635	58DPB+32.82	21.0	LT	N/A	ENDWALL 36	N/A	N/A	---	---	---	---	1	---	---	---	---	---	---	---	---	---	---	---	---	---	---	---	---	B
FWN RAMP	T20	135FWN+24.26	88.7	RT	752.40	MEDIAN 2	MS	2.40	---	---	---	---	---	---	---	---	2	---	---	---	---	---	---	---	1	---	---	---	---	A,C,G,J
FWN RAMP	T401	133FWN+52.53	14.9	RT	753.25	MEDIAN 2	MS	5.22	---	---	---	---	---	---	---	---	2	---	---	---	---	---	---	---	1	---	---	---	---	A,C,G
FNE RAMP	CSD1	1330FNE+24.17	34.0	RT	778.17	IN 2X2-FT	V	2.75	---	---	---	---	---	---	---	---	---	1	---	---	---	1	---	---	---	---	---	---	---	SURF. DRAIN
PROJECT 1517-07-72 TOTAL									5	5	6	1	3	1	3	1	8	10	4	3	5	2	6	1	4	1	2	1	7	

1) STRUCTURE DEPTH = RIM ELEVATION - CASTING DEPTH - 6" FOR ADJUSTMENT RINGS - INVERT ELEVATION
2) USE CONCRETE COLLAR TO ATTACH EXISTING PIPE TO NEW STRUCTURE, SEE CONSTRUCTION DETAIL
A) WHEN CONNECTING TO EXISTING PIPES, CONTRACTOR SHALL FIELD VERIFY EXISTING PIPE SIZES, MATERIALS, AND INVERT ELEVATIONS PRIOR TO MANUFACTURING STRUCTURES.
B) STATION/OFFSET OF APRON ENDWALLS ARE TO FLOWLINE END OF ENDWALL.
C) STATION/OFFSET/RIM ELEVATION ARE GIVEN FROM THE CENTER OF STRUCTURE. SEE CONSTRUCTION DETAIL
D) STATION/OFFSET OF INLETS ARE GIVEN FROM TOE OF CONCRETE BARRIER OR FACE OF CURB AND GUTTER. RIM ELEVATIONS ARE GIVEN AT THE FLANGE LINE. SEE CONSTRUCTION DETAIL
E)STATION/OFFSET AND RIM ELEVATION ARE GIVEN FROM EDGE OF PAN, 1 -FT FROM TOE OF PARAPET, SEE CONSTRUCTION DETAIL
F) CASTING PLACED IN FUTURE CONTRACT
G) STRUCTURE DEPTH = RIM ELEVATION - INVERT ELEVATION
H) STRUCTURE DEPTH = RIM ELEVATION - CASTING DEPTH - INVERT ELEVATION
I) TO BE CONSTRUCTED IMMEDIATELY AFTER EXISTING USH 41 NB TO USH 10 EB/STH 441 NB RAMP IS CLOSED TO TRAFFIC
J) STRUCTURE TO BE PLACED IN PRELIMINARY STAGE
*ADDITIONAL QUANTITIES SHOWN ELSEWHERE IN PROJECT 1517-07-72

DETENTION POND CORRUGATED METAL ANTI-SEEP COLLAR

LOCATION	SPV.0060.108 DETENTION POND CORRUGATED METAL ANTI-SEEP COLLAR EACH
POND 1	1
PROJECT 1517-07-72 TOTAL	1

Addendum No. 1
ID 1517-07-72
Revised Sheet 190
May 5, 2014

ALL ITEMS ARE CATEGORY **1000** UNLESS OTHERWISE SPECIFIED.

3

STORM SEWER PIPES

ROADWAY	PIPE ID	FROM STR	TO STR	INLET ELEV	DISCH ELEV	SLOPE[1] %	PIPE[2] LENGTH LF	520.8000* CONCRETE COLLARS FOR PIPE EACH	608.0312 STORM SEWER PIPE REINFORCED CONCRETE CLASS III 12-INCH LF	608.0315 STORM SEWER PIPE REINFORCED CONCRETE CLASS III 15-INCH LF	608.0324 STORM SEWER PIPE REINFORCED CONCRETE CLASS III 24-INCH LF	608.0336 STORM SEWER PIPE REINFORCED CONCRETE CLASS III 36-INCH LF	608.0424 STORM SEWER PIPE REINFORCED CONCRETE CLASS IV 24-INCH LF	608.0430 STORM SEWER PIPE REINFORCED CONCRETE CLASS IV 30-INCH LF	608.0542 STORM SEWER PIPE REINFORCED CONCRETE CLASS V 42-INCH LF	REMARKS
USH 10 EB/STH 441 NB	P110	300M	300P	741.69	741.64	0.28	18	---	---	---	---	---	---	---	18	B,C
USH 10 EB/STH 441 NB	P127	301N	300	742.96	742.65	0.29	104	---	---	---	---	---	---	---	104	C
USH 10 EB/STH 441 NB	P219	EXIST	300C	EXIST	742.96	0.00	0	1	---	---	---	---	---	---	---	C
USH 10 EB/STH 441 NB	P252	300	300M	742.65	741.69	0.29	326	---	---	---	---	---	---	---	326	C
USH 10 EB/STH 441 NB	EXIST	EX1	--	770.00	--	--	--	1	---	---	---	---	---	---	---	C
FWN RAMP	P411	411	410	745.16	744.16	1.00	100	---	---	---	96	---	---	---	---	C
FWN RAMP	P412	412P	411	745.26	745.20	1.00	6	---	---	---	8	---	---	---	---	---
FWN RAMP	P421	421	420	743.66	743.45	0.30	69	---	---	---	---	---	65	---	---	B
FWN RAMP	P422	422	421	744.56	744.46	0.50	21	---	---	25	---	---	---	---	---	---
FWN RAMP	P423	423	421	744.53	744.46	0.34	20	---	---	25	---	---	---	---	---	---
FEN RAMP	P430	430	429	741.71	741.68	0.30	9	---	---	---	4	---	---	---	---	B
FEN RAMP	P431	431	430	741.90	741.81	0.30	30	---	---	---	34	---	---	---	---	---
FEN RAMP	P432	432	431	743.22	742.00	0.40	305	---	---	---	310	---	---	---	---	---
FEN RAMP	P433	433	432	744.85	743.32	0.65	236	---	---	---	241	---	---	---	---	---
FEN RAMP	P434	434	432	744.38	744.08	2.00	15	---	---	18	---	---	---	---	---	---
FEN RAMP	P441	441	440	741.12	741.02	2.00	5	---	---	0	---	---	---	---	---	B
FEN RAMP	P451	451	450	740.55	740.45	2.00	5	---	---	---	0	---	---	---	---	B
FEN RAMP	P461	461	460	740.12	740.00	2.00	7	---	---	2	---	---	---	---	---	B
FEN RAMP	P471	471	470	741.60	741.46	2.00	7	---	---	2	---	---	---	---	---	B
FEN RAMP	P481	481	480	744.37	744.29	2.00	5	---	---	0	---	---	---	---	---	B
FNW RAMP	P501	501	500	759.50	758.20	1.50	87	---	---	---	82	---	---	---	---	B
FNE RAMP	P511	511	510	755.23	753.50	2.00	87	---	---	---	82	---	---	---	---	B,D
FNE RAMP	P531	531	530	784.33	784.00	2.00	17	---	---	18	---	---	---	---	---	C
FNE RAMP	P532	532	531	785.50	785.35	2.00	7	---	10	---	---	---	---	---	---	C
FWN RAMP	PT20	T20	EX10	750.00	EXIST	0.40	188	1	---	193	---	---	---	---	---	A,E 749.25
FWN RAMP	PT401	T401	400	748.03	747.19	1.00	84	---	---	---	---	---	---	79	---	C
USH 10 WB	P632	632	632P	751.27	750.83	0.37	120	---	---	---	---	120	---	---	---	B
POND 1	P634	634	633	755.40	754.32	0.45	241	---	---	---	---	236	---	---	---	B
POND 1	P635	635	633	755.50	755.40	0.68	15	---	---	---	---	10	---	---	---	B
FWN RAMP	PTEX10	EX10	T401	EXIST	748.49	5.00	4	1	---	---	---	---	---	7	---	A,E 748.70
PROJECT 1517-07-72 TOTAL								4	10	282	857	366	65	86	448	

1) SLOPE CALCULATED BASED ON "PIPE LENGTH"
2) "PIPE LENGTH" COLUMN SHOWN FOR SLOPE CALCULATION ONLY. NOT INTENDED FOR PAY QUANTITY.
"PIPE LENGTH" REPRESENTS LENGTH OF PIPE MEASURED FROM INSIDE STRUCTURE WALL TO EITHER INSIDE STRUCTURE WALL OR FLOWLINE END OF ENDWALL
A) WHEN CONNECTING TO EXISTING PIPES, CONTRACTOR SHALL FIELD VERIFY EXISTING PIPE SIZES, MATERIALS, AND INVERT ELEVATIONS PRIOR TO MANUFACTURING STRUCTURES.
B) JOINT TIES FOR CONCRETE PIPE SHALL BE PROVIDED AT ALL REINFORCED CONCRETE APRON ENDWALL LOCATIONS. APRON ENDWALLS SHALL BE TIED FOR THE LAST THREE JOINTS AT PIPE ENDS.
THE COST OF THESE TIES SHALL BE INCLUDED IN THE CONTRACT PRICE OF THE PIPE.
C) JOINT TIES FOR CONCRETE PIPE SHALL BE PROVIDED AT EACH JOINT IN AREAS WITH PREFABRICATED VERTICAL DRAINS. THE COST OF THESE TIES SHALL BE INCLUDED IN THE CONTRACT PRICE OF THE PIPE.
D) TO BE CONSTRUCTED IMMEDIATELY AFTER EXISTING USH 41 NB TO USH 10 EB/STH 441 NB RAMP IS CLOSED TO TRAFFIC
E) ALL OR PORTION OF PIPE TO BE PLACED IN PRELIMINARY STAGE
*ADDITIONAL QUANTITIES SHOWN ELSEWHERE IN PROJECT 1517-07-72

Addendum No. 1
ID 1517-07-72
Revised Sheet 191
May 5, 2014

ALL ITEMS ARE CATEGORY **1000** UNLESS OTHERWISE SPECIFIED.

3

ADJUSTING DRAINAGE STRUCTURES

STRUCTURE NUMBER	STATION	OFFSET	LOCATION	611.0430 RECONSTRUCTING INLETS EACH	SPV.0060.120* COVER PLATES LEFT IN PLACE EACH
EX10	133FWN+53.88	21.6' LT	FWN RAMP	1	1
PROJECT 1517-07-72 TOTAL				1	1

*ADDITIONAL QUANTITIES SHOWN ELSEWHERE IN PROJECT 1517-07-72

CONCRETE BARRIER

STATION	OFFSET	LOCATION	603.1132 CONCRETE BARRIER TYPE S32 LF	603.1142 CONCRETE BARRIER TYPE S42 LF	603.3513 CONCRETE BARRIER TRANSITION TYPE S32 TO S36 EACH	603.3535 CONCRETE BARRIER TRANSITION TYPE S36 TO S42 EACH
1336FNE+01 - 1336FNE+90	RT	FNE RAMP	76	--	1	--
1336FNE+90 - 1338FNE+00	RT	FNE RAMP	--	97	--	1
~~182EB+81 - 182EB+93~~	~~RT~~	~~USH 10 EB/STH 441 NB~~	~~--~~	~~--~~	~~--~~	~~--~~
PROJECT 1517-07-72 TOTAL			76	97	1	1

3

PIPE UNDERDRAIN

STATION	OFFSET	LOCATION	521.1012 APRON ENDWALLS FOR CULVERT PIPE STEEL 12-INCH EACH	607.0406 STORM SEWER PIPE COMPOSITE 6-INCH LF	612.0106 PIPE UNDER-DRAIN 6-INCH LF	612.0212 PIPE UNDERDRAIN UNPERFORATED 12-INCH LF	612.0806 APRON ENDWALLS FOR UNDERDRAIN REINFORCED CONCRETE 6-INCH EACH	628.7570 ROCK BAGS EACH	SPV.0060.005 SALVAGE & REINSTALL PIPE UNDERDRAIN AND APRON ENDWALL EACH	REMARKS
1315FNW+41 - 1315FNW+91	LT	FNW RAMP	---	---	50	---	---	---	---	
1315FNW+96 - 1316FNW+47	LT	FNW RAMP	---	---	50	---	---	---	---	
1321FNE+63 - 1322FNE+12	LT	FNE RAMP	---	---	50	---	---	---	---	
1322FNE+18 - 1322FNE+67	LT	FNE RAMP	---	---	50	---	---	---	---	
1329FNE+77	RT	FNE RAMP	1	---	---	78	---	---	---	1329FNE+76.89 91.9' RT
1335FNE+70 - 1336FNE+08	LT	FNE RAMP	---	---	40	---	1	---	---	ENDWALL: 1335FNE+70,17.5 LT
129FWN+52 - 130FWN+00	RT	FWN RAMP	---	---	50	---	---	---	---	
126FWN+79 - 127FWN+27	RT	FWN RAMP	---	5	48	---	---	4	---	
126FWN+54 - 126FWN+72	RT	FWN RAMP	---	5	18	---	---	4	---	
126FWN+29 - 126FWN+48	RT	FWN RAMP	---	5	19	---	---	4	---	
125FWN+73 - 126FWN+22	RT	FWN RAMP	---	5	49	---	---	4	---	
166FEN+38 - 166FEN+87	LT	FEN RAMP	---	5	49	---	---	4	---	
1367NB+51 - 1368NB+00	RT	USH 41 NB	---	---	53	---	---	---	---	CONNECT TO EXISTING DRAIN TILE
132WB+19.67	RT	USH 10 WB	---	---	---	---	---	---	1	EXISTING SURFACE DRAIN
UNDISTRIBUTED			---	---	---	---	---	50	---	
PROJECT 1517-07-72 TOTAL			1	25	526	78	1	70	1	

Addendum No. 1
ID 1517-07-72
Revised Sheet 192
May 5, 2014

ALL ITEMS ARE CATEGORY **1000** UNLESS OTHERWISE SPECIFIED.

3

RIPRAP, SOD & GEOTEXTILE FABRIC

STATION	OFFSET	LOCATION	606.0200 RIPRAP MEDIUM CY	631.1100 SOD EROSION CONTROL SY	645.0120 GEOTEXTILE FABRIC TYPE HR SY
124WB+92	LT	USH 10 WB	5	6	9
131WB+26 - 132WB+73	RT	USH 10 WB	78	--	156
1361NB+20	RT	USH 41 NB	5	6	9
1362NB+75	RT	USH 41 NB	3	6	6
1365NB+75	RT	USH 41 NB	3	6	6
1367NB+50	RT	USH 41 NB	3	6	6
140FEN+39	RT	FEN RAMP	7	7	13
157FEN+86	RT	FEN RAMP	7	7	13
157FEN+94	RT	FEN RAMP	7	7	13
160FEN+46	RT	FEN RAMP	5	6	9
163FEN+39	RT	FEN RAMP	5	6	9
169FEN+46	RT	FEN RAMP	5	6	9
171FEN+76	RT	FEN RAMP	3	6	6
1322FNE+15	RT	FNE RAMP	5	6	9
1329FNE+77	RT	FNE RAMP	2	--	3
1336FNE+24	RT	FNE RAMP	29	6	58
1315FNW+94	RT	FNW RAMP	5	6	9
1328FNW+15	LT	FNW RAMP	3	6	6
1338FNW+04	RT	FNW RAMP	5	6	9
133FWN+52	LT	FWN RAMP	7	7	13
58DPB+82 - 59DPB+02	RT/LT	POND 1	35	--	71
50DPB+00 - 59DPB+07	LT	POND 1	603	--	--
0+00	RT/LT	DITCH 2	9	8	18
UNDISTRIBUTED			210	30	115
PROJECT 1517-07-72 TOTAL			1,049	150	575

WATER

LOCATION	624.0100 WATER MGAL	SPV.0120.001 WATER FOR SEEDED AREAS MGAL
AGGREGATE COMPACTION	64	--
EARTHWORK COMPACTION	1,432	--
DUST CONTROL	250	--
SEEDED AREAS	--	2,840
PROJECT 1517-07-72 TOTAL	1,746	2,840

MOBILIZATION

LOCATION	619.1000 MOBILIZATION EACH
PROJECT 1517-07-72	1
PROJECT 1517-07-72 TOTAL	1

MAINTENANCE AND REPAIR OF HAUL ROADS

LOCATION	618.0100 MAINTENANCE AND REPAIR OF HAUL ROADS PROJECT I.D. 1517-07-72 EACH
PROJECT 1517-07-72	1
PROJECT 1517-07-72 TOTAL	1

RESTORATION

STATION	OFFSET	LOCATION	625.0500 SALVAGED TOPSOIL SY	627.0200 MULCHING SY	628.6510 SOIL STABILIZER TYPE B ACRE	629.0205 FERTILIZER TYPE A CWT	630.0120 SEEDING MIXTURE NO. 20 LB	630.0200 SEEDING TEMPORARY LB	REMARKS
114WB+50 - 133WB+00	RT/LT	USH 10 WB	36,495	8,599	--	21.5	986	986	INCLUDES DITCH 1
1310NB+79 - 1319NB+09	RT	USH 41 NB	1,682	1,682	--	1.1	45	45	
1364NB+56 - 1387NB+40	RT/LT	FEN RAMP	4,983	1,768	--	2.6	134	134	
118FEN+50 - 125FEN+90	RT/LT	FEN RAMP	7,498	5,064	--	4.4	202	202	
136FEN+66 - 142FEN+50	RT/LT	FEN RAMP	7,682	4,357	--	4.4	208	208	
152FEN+92 - 176FEN+65	RT	FEN RAMP	8,006	3,487	--	2.5	217	217	
1322FNE+26 - 1324FNE+06	RT	FNE RAMP	557	557	--	0.3	15	15	
1323FNE+20 - 1331FNE+15	RT/LT	FNE RAMP	4,049	3,500	--	2.5	109	109	
1335FNE+09 - 1342FNE+70	RT/LT	FNE RAMP	10,749	559	--	6.2	290	290	
1307FNW+89 1325FNW+50	RT	FNW RAMP	10,608	7,401	--	6.4	286	286	
1334FNW+00 1336FNW+75	RT	FNW RAMP	5,833	4,632	--	3.6	157	157	
128FWN+01 - 136FWN+82	RT/LT	FWN RAMP	6,523	4,545	--	4.1	176	176	
113FWS+00 - 119FWS+45	RT/LT	FWS RAMP	4,632	1,768	--	3.0	125	125	
50DPB+00 - 59DPB+07	RT/LT	POND 1	3,165	726	--	2.0	22	86	
20+00 - 26+09	RT/LT	DITCH 2	5,871	4,679	--	3.7	158	158	
19TNE+07 - 29TNE+33	LT	TNE RAMP	1,232	817	--	0.8	33	33	
35TWN+57 - 54TWN+43	RT/LT	TWN RAMP	4,004	--	--	2.2	108	108	
179EB+63 - 183EB+75	RT	USH 10EB/STH 441NB	4,802	--	--	3.0	130	130	
UNDISTRIBUTED			--	--	12	--	--	--	
PROJECT 1517-07-72 TOTAL			128,371	54,141	12	74.3	3,401	3,465	

Addendum No. 1
ID 1517-07-72
Revised Sheet 194
May 5, 2014

ALL ITEMS ARE CATEGORY **1000** UNLESS OTHERWISE SPECIFIED.

3

EROSION BALES AND SILT FENCE

STATION	OFFSET	LOCATION	628.1104 EROSION BALES EACH	628.1504 SILT FENCE LF	628.1520 SILT FENCE MAINTENANCE LF	REMARKS
117WB+97 - 118WB+35	LT	USH10 WB	--	38	38	
118WB+95 - 119WB+06	LT	USH10 WB	--	12	12	
123WB+38 - 123WB+47	LT	USH10 WB	--	9	9	
124WB+16 - 125WB+93	LT	USH10 WB	--	177	177	
126WB+68 - 133WB+05	LT	USH10 WB	32	758	758	
132WB+72 - 133WB+05	RT	USH10 WB	28	71	71	
1364NB+56 - 1368NB+05	RT	USH 41 NB	--	352	352	
1382NB+00 - 1382NB+91	RT	USH 41 NB	--	91	91	
1385NB+00 - 1385NB+80	RT	USH 41 NB	--	84	84	
1386NB+91 - 1387NB+45	RT	USH 41 NB	--	70	70	
123FEN+90 - 125FEN+92	RT/LT	FEN RAMP	--	253	253	
137FEN+18 - 137FEN+26	RT/LT	FEN RAMP	99	248	248	
140FEN+11 - 142FEN+55	RT	FEN RAMP	--	276	276	
152FEN+87 - 154FEN+79	RT	FEN RAMP	--	192	192	
156FEN+19 - 176FEN+65	RT/LT	FEN RAMP	--	2,051	2,051	
1322FNE+50 - 1325FNE+84	RT	FNE RAMP	62	392	392	
1335FNE+93 - 1342FNE+75	RT/LT	FNE RAMP	176	1,106	1,106	
1333FNW+94 - 1338FNW+26	RT/LT	FNW RAMP	--	451	451	
1335FNW+05 - 1335FNW+88	RT	FNW RAMP	--	101	101	
1344FNW+71 - 1344FNW+82	LT	FNW RAMP	--	14	14	FROM DITCH 2
1345FNW+18 - 1345FNW+30	LT	FNW RAMP	--	13	13	FROM DITCH 2
1353FNW+27 - 1353FNW+68	LT	FNW RAMP	--	34	34	TO DITCH 2
1353FNW+58 - 1353FNW+92	LT	FNW RAMP	--	29	29	TO DITCH 2
1354FNW+37 - 1355FNW+06	LT	FNW RAMP	--	58	58	TO DITCH 2
1354FNW+61 - 1355FNW+45	LT	FNW RAMP	--	69	69	TO DITCH 2
1355FNW+67 - 1355FNW+72	LT	FNW RAMP	--	10	10	TO DITCH 2
112FWS+95 - 119FWS+50	RT	FWS RAMP	--	728	728	
118FWS+79 - 119FWS+50	LT	FWS RAMP	--	150	150	
28TNE+99 - 29TNE+37	LT	TNE RAMP	--	51	51	
35TWN+59 - 35TWN+96	LT	TWN RAMP	--	40	40	
36TWN+63 - 37TWN+72	LT	TWN RAMP	--	124	124	
38TWN+37 - 39TWN+57	LT	TWN RAMP	24	146	146	
179EB+63 - 180EB+10	RT	USH 10 EB / STH 441 NB	90	--	--	
179EB+61 - 184EB+38	RT	USH 10 EB / STH 441 NB	--	660	660	
UNDISTRIBUTED			128	2,215	2,215	
PROJECT 1517-07-72 TOTAL			639	11,073	11,073	

3

INLET PROTECTION

STRUCTURE NUMBER	LOCATION	628.7005 INLET PROTECTION TYPE A EACH	628.7010 INLET PROTECTION TYPE B EACH	628.7015 INLET PROTECTION TYPE C EACH	628.7020 INLET PROTECTION TYPE D EACH	REMARKS
300	USH 10 EB / STH 441 NB	1	--	--	--	
300M	USH 10 EB / STH 441 NB	1	--	--	--	
301N	USH 10 EB / STH 441 NB	1	--	--	--	
411	FWN RAMP	1	--	--	1	
421	FWN RAMP	1	1	--	--	
422	FWN RAMP	1	1	--	--	
423	FWN RAMP	1	1	--	--	
430	FEN RAMP	1	1	--	--	
431	FWN RAMP	1	--	--	--	
432	FWN RAMP	1	--	--	--	
433	FWN RAMP	1	--	--	--	
434	FWN RAMP	1	1	--	--	
441	FEN RAMP	1	1	--	--	
451	FEN RAMP	1	--	--	1	
461	FEN RAMP	1	--	--	1	
471	FEN RAMP	1	1	--	--	
481	FEN RAMP	1	1	--	--	
501	FNE RAMP	1	--	--	--	
511	FNE RAMP	1	--	--	--	
531	FNE RAMP	1	1	--	--	
532	FNE RAMP	1	1	--	--	
533	FNE RAMP	1	--	--	--	
CSD1	FNE RAMP	1	1	--	--	
T20	TWN RAMP	1	--	--	--	
T401	FWN RAMP	1	--	--	--	
EX1	USH 10 EB / STH 441 NB	1	--	--	--	
EX8	FNW RAMP	--	--	1	--	1353FNW+67, 234' LT
EX9	FNW RAMP	--	--	1	--	1344FNW+60, 195' LT
	UNDISTRIBUTED	7	3	1	1	
PROJECT 1517-07-72 TOTAL		33	14	3	4	

Addendum No. 1
ID 1517-07-72
Revised Sheet 195
May 5, 2014

ALL ITEMS ARE CATEGORY **1000** UNLESS OTHERWISE SPECIFIED.

3

PERMANENT SIGNING

ROADWAY	STATION	OFFSET	SIGN NO.	SIGN CODE	SIGN SIZE	SIGN SIZE (INCHES)	637.2230* SIGNS TYPE II REFLECTIVE F SF	634.0616 POSTS WOOD 4X6-INCH X 16 FEET EACH	REMARKS
STAGE 1									
TNE RAMP	21TNE+79	22.00' RT	101	W1-2R	5	48 X 48	16.0	--	ROAD CURVES RIGHT - ON SAME POST AS SIGN 102
TNE RAMP	21TNE+79	22.00' RT	102	W13-3	5	48 X 60	20.0	2	RAMP SPEED 40 M.P.H.
USH 41NB	1340NB+02	40.00' RT	103	W4-1	5	48 X 48	16.0	1	THRU TRAFFIC MERGE LEFT
TWN RAMP	35TWN+76	7.00' RT	104	W1-6	2	48 X 24	8.0	1	ONE DIRECTION LARGE ARROW
TWN RAMP	38TWN+09	27.00' LT	105	W1-6	2	48 X 24	8.0	1	ONE DIRECTION LARGE ARROW
PROJECT 1517-07-72 TOTAL							68.0	5	

* ADDITIONAL QUANTITIES FOUND ELSEWHERE IN PROJECT 1517-07-72

TRAFFIC CONTROL

STATION	DURATION DAYS	603.8000 CONCRETE BARRIER TEMPORARY PRECAST DELIVERED LF	603.8125 INSTALLED LF	SPV.0090.204 LEFT IN PLACE LF	614.0905 CRASH CUSHION TEMPORARY EACH	SPV.0060.202 LEFT IN PLACE EACH	SPV.0060.204 TEMPORARY THRIE BEAM CONNECTION LEFT IN PLACE EACH	643.0300 TRAFFIC CONTROL DRUMS EACH	DAYS	643.0420 BARRICADES TYPE III EACH	DAYS	643.0705 TRAFFIC CONTROL WARNING LIGHTS TYPE A EACH	DAYS	643.0715 TYPE C EACH	DAYS	643.0800 TRAFFIC CONTROL ARROW BOARDS EACH	DAYS	643.0900 SIGNS EACH	DAYS	643.0910 TRAFFIC CONTROL COVERING SIGNS TYPE I EACH	643.0920 TYPE II EACH	643.1050 TRAFFIC CONTROL SIGNS PCMS EACH	DAYS	SPV.0045.050 PCMS REMOTE COMMUNICATIONS EACH	DAYS
PRELIMINARY STAGE	30	1,423	1,423	--	3	--	--	324	9,720	11	330	22	660	324	9,720	5	150	67	2,010	--	1	--	--	--	--
STAGE 1A	305	7,703	9,126	3,855	5	4	1	145	44,225	--	--	--	--	22	6,710	3	915	79	24,095	--	--	--	--	--	--
STAGE 1 - LOOP CLOSURE	2	--	--	--	--	--	--	26	52	4	8	8	16	26	52	--	--	11	22	--	1	--	--	--	--
STAGE 1B	30	--	651	--	1	--	--	165	4,950	--	--	--	--	22	660	4	120	81	2,430	--	--	--	--	--	--
LEFT IN PLACE	0	--	4,669	4,669	--	--	--	--	--	--	--	--	--	--	--	--	--	--	--	--	--	--	--	--	--
UNDISTRIBUTED		--	--	--	--	--	--	--	2,697	--	17	--	33	--	822	--	53	--	1,305	10	10	4	1,460	4	1,460
PROJECT 1517-07-72 TOTAL		9,126	15,869	8,524	9	4	1		61,644		355		709		17,964		1,238		29,862	10	12		1,460		1,460

TRAFFIC CONTROL PAVEMENT MARKING

STATION	646.0103 PAVEMENT MARKING PAINT 4-INCH (WHITE) LF	(YELLOW) LF	646.0106 PAVEMENT MARKING EPOXY 4-INCH (WHITE) LF	(YELLOW) LF	646.0123 PAVEMENT MARKING PAINT 8-INCH LF	646.0126 PAVEMENT MARKING EPOXY 8-INCH LF	646.0600 REMOVING PAVEMENT MARKING LF	649.2100 TEMPORARY RAISED PAVEMENT MARKERS EACH
PRELIMINARY STAGE	1,102	873	--	--	356	--	--	--
STAGE 1A	--	--	12,941	6,953	--	1,858	14,850	108
STAGE 1B	700	--	--	--	--	--	--	--
LEFT IN PLACE	--	--	8,838	5,285	--	290	13,980	--
PROJECT 1517-07-72 TOTAL	1,802	873	21,779	12,238	356	2,148	28,830	108
	2,675		34,017					

Addendum No. 1
ID 1517-07-72
Revised Sheet 199
May 5, 2014

ALL ITEMS ARE CATEGORY **1000** UNLESS OTHERWISE SPECIFIED.

3

SAWCUTS

STATION	OFFSET	LOCATION	690.0150 SAWING ASPHALT LF	690.0250 SAWING CONCRETE LF	REMARKS
1307NB+89	RT	USH 41 NB	8	14	
1307NB+89 - 1324NB+18	RT	USH 41 NB	--	1,631	
1324NB+18	RT	USH 41 NB	10	--	
1351NB+40 - 1387FNE+40	RT	USH 41 NB	--	3,610	
1387NB+40	RT	USH 41 NB	10	--	
119FEN+92	RT	FEN RAMP	--	12	
119FEN+92 - 121FEN+93	RT	FEN RAMP	--	210	
164FEN+50 - 166FEN+73	LT	FEN RAMP	--	220	
159FEN+99 - 166FEN+73	LT	FEN RAMP	--	678	
166FEN+89	LT	FEN RAMP	8	14	
1327FNE+81 - 1327FNE+84	LT	FNE RAMP	6	24	
1322FNE+26 - 1324FNE+06	RT	FNE RAMP	185	--	
1344FNW+55 - 1344FNW+67	LT	FNW RAMP	5	18	EXIST FWS RAMP
1344FNW+86 - 1344FNW+98	LT	FNW RAMP	5	18	EXIST FWS RAMP
1353FNW+92 - 1354FNW+15	LT	FNW RAMP	5	18	EXIST FWS RAMP
1354FNW+07 - 1354FNW+31	LT	FNW RAMP	5	18	EXIST FWS RAMP
129FWN+97 - 129FWN+99	RT	FWN RAMP	5	15	
133FWN+75	RT	FWN RAMP	10	--	
125FWN+39 - 133FWN+75	RT	FWN RAMP	--	845	
136FWN+52 - 136FWN+63	RT	FWN RAMP	12	15	
139FWN+39 - 140FWN+52	RT	FWN RAMP	56	92	
~~182EB+81 - 182EB+93~~	~~RT~~	~~USH 10 EB/STH 441 NB~~	~~--~~	~~--~~	
PROJECT 1517-07-72 TOTAL			330	7,452	

DRAINAGE BLANKET

STATION	LOCATION	SPV.0035.004 DRAINAGE BLANKET CY
120WB+00 - 128WB+12	USH 10 WB	8,375
126WB+75 - 133WB+00	USH 10 WB	8,315
1365NB+03 - 1365NB+50	USH 41 NB	65
122FEN+50 - 125FEN+90	FEN RAMP	2,071
136FEN+66 - 140FEN+00	FEN RAMP	2,810
1324FNE+50 - 1331FNE+29	FNE RAMP	4,390
1335FNE+09 - 1342FNE+70	FNE RAMP	6,898
132FWN+00 - 135FWN+25	FWN RAMP	964
179EB+63 - 183EB+75	USH 10 EB / STH 441 NB	2,715
PROJECT 1517-07-72 TOTAL		36,603

POND LINER CLAY

STATION	OFFSET	LOCATION	SPV.0035.100 POND LINER CLAY CY
50DPB+00 - 59DPB+07	LT	POND 1	2,741
PROJECT 1517-07-72 TOTAL			2,741

Addendum No. 1
ID 1517-07-72
Revised Sheet 200
May 5, 2014

ALL ITEMS ARE CATEGORY **1000** UNLESS OTHERWISE SPECIFIED.

3

VIBRATING WIRE PIEZOMETER INSTRUMENTATION SYSTEM DELIVERED

STATION	OFFSET	LOCATION	SPV.0060.008 VIBRATING WIRE PIEZOMETER INSTRUMENTATION SYSTEM DELIVERED EACH
122WB+00	20.0' LT	USH 10 WB	1
126WB+00	20.0' LT	USH 10 WB	1
130WB+00	40.0' LT	USH 10 WB	1
132WB+00	40.0' LT	USH 10 WB	1
143WB+29	233.4' RT	USH 10 WB	1
146WB+27	199.1' RT	USH 10 WB	1
147WB+30	218.6' RT	USH 10 WB	1
147WB+83	249.2' RT	USH 10 WB	1
181WB+38	117.4' RT	USH 10 WB	1
182WB+71	133.2' RT	USH 10 WB	1
1365NB+05	96.0' LT	USH 41 NB	1
124FEN+50	5.0' RT	FEN RAMP	1
137FEN+50	15.0' RT	FEN RAMP	1
139FEN+00	20.0' RT	FEN RAMP	1
142FEN+25	21.0' LT	FEN RAMP	1
153FEN+00	10.0' LT	FEN RAMP	1
1327FNE+00	15.0' RT	FNE RAMP	1
1330FNE+00	20.0' RT	FNE RAMP	1
133FWN+80	1.0' RT	FWN RAMP	1
135FWN+00	1.0' RT	FWN RAMP	1
PROJECT 1517-07-72 TOTAL			20

SETTLEMENT GAUGES

STATION	OFFSET	LOCATION	SPV.0060.009 SETTLEMENT GAUGES EACH
122WB+00	20.0' LT	USH 10 WB	1
126WB+00	20.0' LT	USH 10 WB	1
130WB+00	40.0' LT	USH 10 WB	1
132WB+00	40.0' LT	USH 10 WB	1
143WB+29	233.4' RT	USH 10 WB	1
146WB+27	199.1' RT	USH 10 WB	1
147WB+30	218.6' RT	USH 10 WB	1
147WB+63	216.0' RT	USH 10 WB	1
181WB+38	117.4' RT	USH 10 WB	1
182WB+71	133.2' RT	USH 10 WB	1
1365NB+05	96.0' LT	USH 41 NB	1
124FEN+50	5.0' RT	FEN RAMP	1
137FEN+50	15.0' RT	FEN RAMP	1
139FEN+00	20.0' RT	FEN RAMP	1
142FEN+25	25.0' LT	FEN RAMP	1
153FEN+00	10.0' LT	FEN RAMP	1
175FEN+99	15.0' RT	FEN RAMP	1
177FEN+71	15.0' RT	FEN RAMP	1
1327FNE+00	15.0' RT	FNE RAMP	1
1330FNE+00	20.0' RT	FNE RAMP	1
133FWN+80	1.0' RT	FWN RAMP	1
135FWN+00	1.0' RT	FWN RAMP	1
PROJECT 1517-07-72 TOTAL			22

STREET SWEEPING

STATION	SPV.0060.096 EMERGENCY SWEEPING MOBILIZATION EACH	SPV.0075.001 STREET SWEEPING HRS	SPV.0075.002 EMERGENCY SWEEPING HRS
UNDISTRIBUTED	12	24	24
PROJECT 1517-07-72 TOTAL	12	24	24

3

TRUCK MOUNTED ATTENUATOR

LOCATION	SPV.0075.200 TRUCK MOUNTED ATTENUATOR WITH OPERATOR HRS	SPV.0075.201 TRUCK MOUNTED ATTENUATOR WITHOUT OPERATOR HRS
UNDISTRIBUTED	50	50
PROJECT 1517-07-72 TOTAL	50	50

POND EDGE SEED

STATION		STATION	OFFSET	LOCATION	SPV.0085.100 POND EDGE SEED LB
50DPB+00	-	58DPB+82	LT	POND 1	139
59DPB+02	-	59DPB+07	LT	POND 1	1
PROJECT 1517-07-72 TOTAL					140

RECONSTRUCTING SANITARY MANHOLES

STATION	OFFSET	LOCATION	SPV.0200.050 RECONSTRUCTING SANITARY MANHOLES VF
118WB+32	49' LT	USH 10 WB	13
118FEN+83	29' LT	FEN RAMP	3
PROJECT 1517-07-72 TOTAL			16

Addendum No. 1
ID 1517-07-72
Revised Sheet 201
May 5, 2014

ALL ITEMS ARE CATEGORY **1000** UNLESS OTHERWISE SPECIFIED.

3

CONCRETE CURB & GUTTER 6-INCH SLOPED 60-INCH TYPE A FULL DEPTH

STATION	OFFSET	LOCATION	SPV.0090.001 CONCRETE CURB & GUTTER 6-INCH SLOPED 60-INCH TYPE A FULL DEPTH LF
168FEN+75 - 168FEN+97	LT	FEN RAMP	22
PROJECT 1517-07-72 TOTAL			22

PREFABRICATED VERTICAL DRAINS

STATION	STATION	LOCATION	SPV.0090.006 PREFABRICATED VERTICAL DRAINS LF	SPV.0090.010 PREBORED PREFABRICATED VERTICAL DRAINS LF
120WB+00 -	128WB+12	USH 10 WB	89,250	--
126WB+75 -	133WB+00	USH 10 WB	76,330	--
1365NB+03 -	1365NB+50	USH 41 NB	945	--
122FEN+50 -	125FEN+90	FEN RAMP	24,970	--
136FEN+66 -	140FEN+00	FEN RAMP	28,880	--
1324FNE+50 -	1331FNE+29	FNE RAMP	49,170	2,860
1335FNE+09 -	1342FNE+70	FNE RAMP	168,300	--
132FWN+00 -	135FWN+25	FWN RAMP	7,035	10,710
179EB+63 -	183EB+75	USH 10 EB / STH 441 NB	45,610	--
PROJECT 1517-07-72 TOTAL			490,490	13,570

PREBORE ASSUMED OVER AREAS OF EXISTING ROADWAY

SURVEY PROJECT

LOCATION	SPV.0105.001 SURVEY PROJECT ID 1517-07-72 LS
PROJECT 1517-07-72	1
PROJECT 1517-07-72 TOTAL	1

3

GEOTECHNICAL INSTRUMENTATION

LOCATION	SPV.0105.007 GEOTECHNICAL INSTRUMENTATION LS
PROJECT 1517-07-72	1
PROJECT 1517-07-72 TOTAL	1

REMOVING RUMBLE STRIPS

STATION	STATION	LOCATION	SPV.0180.002 REMOVING RUMBLE STRIPS SY
1339NB+80 -	1392NB+70	USH 41 NB	290
PROJECT 1517-07-72 TOTAL			290

Addendum No. 1
ID 1517-07-72
Revised Sheet 202
May 5, 2014

ALL ITEMS ARE CATEGORY **1000** UNLESS OTHERWISE SPECIFIED.

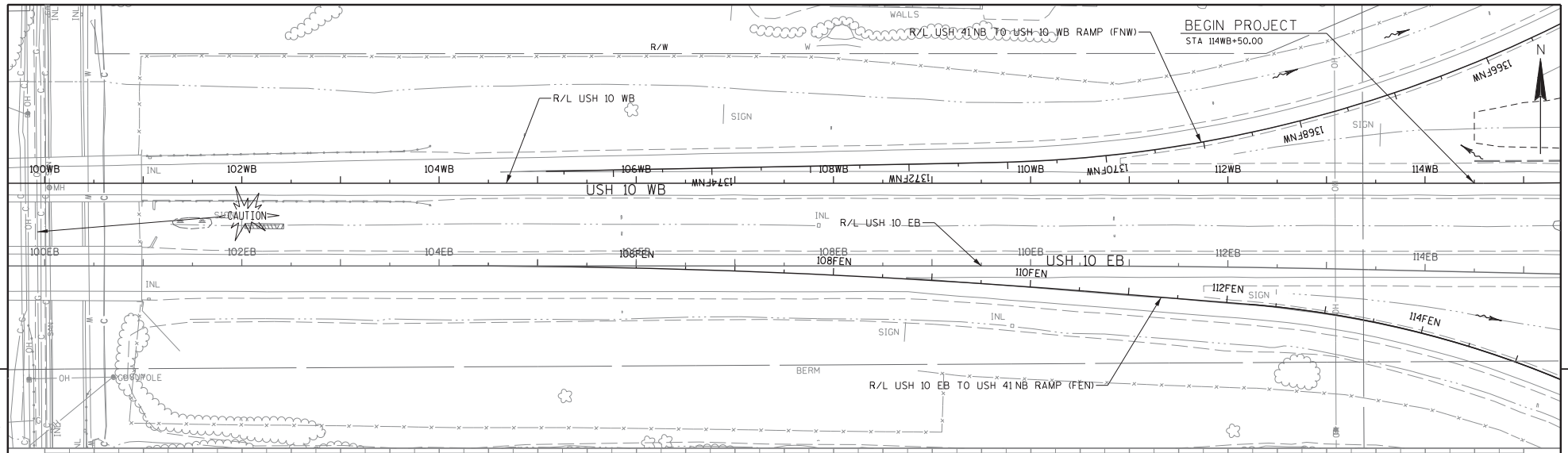

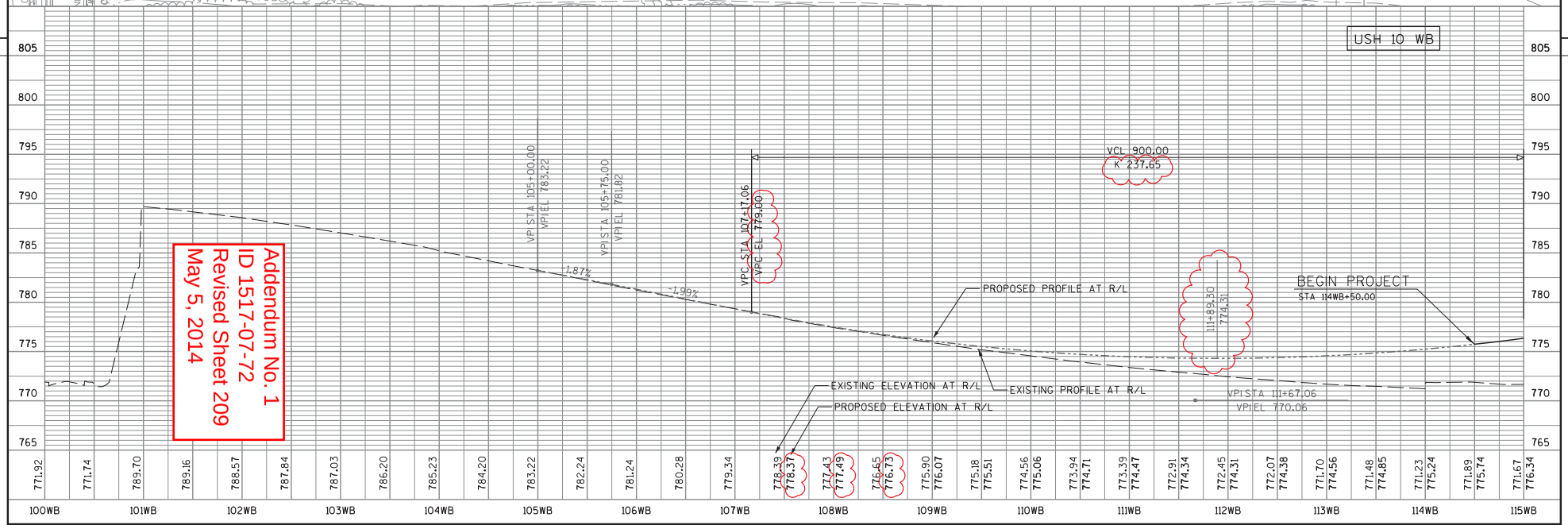

Addendum No. 1
ID 1517-07-72
Revised Sheet 209
May 5, 2014

PROJECT NO: 1517-07-72	HWY: USH 10	COUNTY: WINNEBAGO	PLAN & PROFILE: USH 10 WB	SHEET 209	E

FILE NAME : S:\DOT\DOT_NE\120012-Tri County Freeway\1517-07-72\DGN_Files\Plansheets\050112_pp.dgn PLOT DATE : 5/1/2014 PLOT BY : wally_w PLOT NAME : PLOT SCALE : 1:100

WISDOT/CADDS SHEET 45

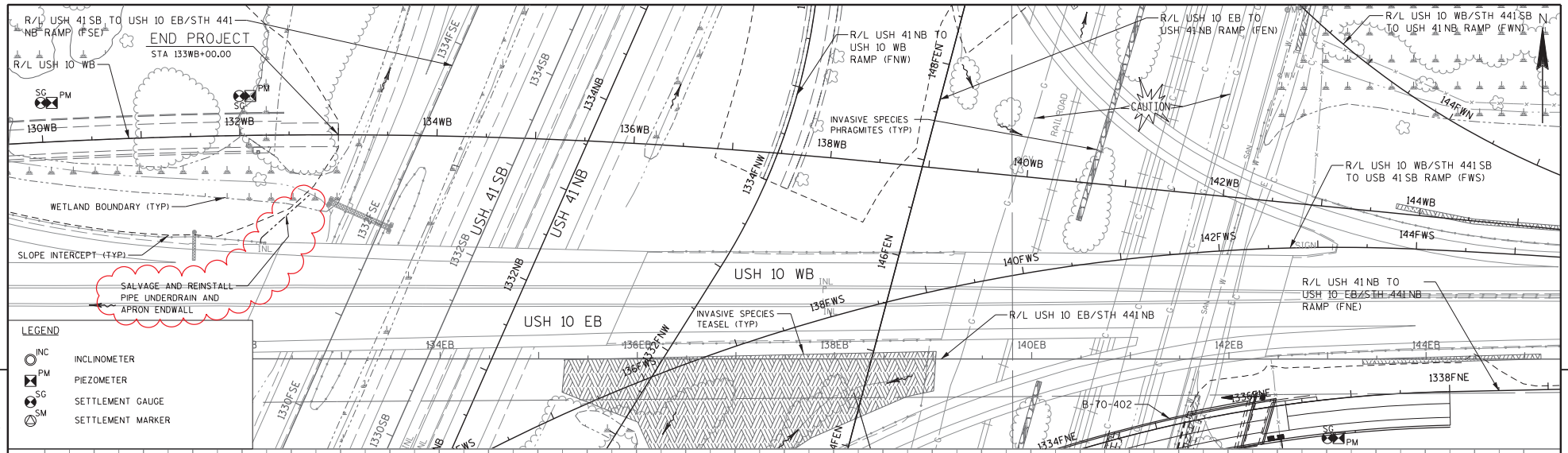

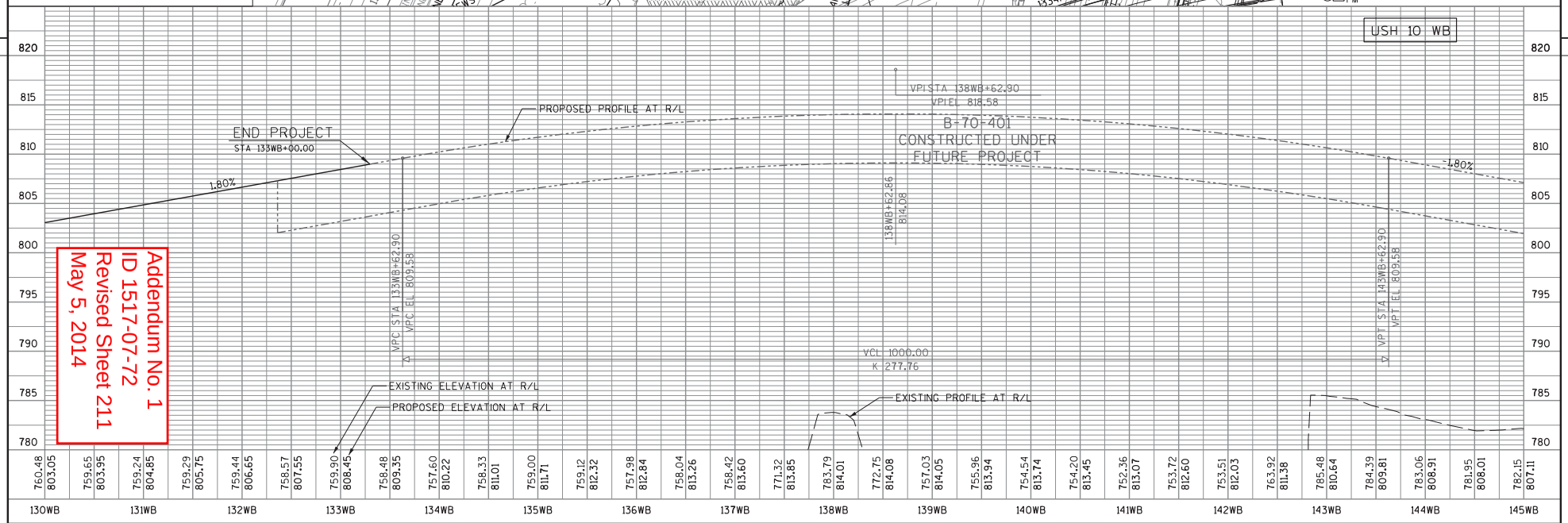

Addendum No. 1
ID 1517-07-72
Revised Sheet 211
May 5, 2014

PROJECT NO: 1517-07-72	HWY: USH 10	COUNTY: WINNEBAGO	PLAN & PROFILE: USH 10 WB	SHEET 211	E

FILE NAME : S:\DOT\DOT_NE\120012-Tri County Freeway\1517-07-72\DGN_Files\Plansheets\050114_pp.dgn PLOT DATE : 4/25/2014 PLOT BY : wally_w PLOT NAME : PLOT SCALE : 1:100

WISDOT/CADDS SHEET 45

STATE PROJECT NUMBER
1517-07-72

BENCH MARK

NO.	DESCRIPTION	ELEVATION
LA 4	SE FLANGE OF HYDRANT ON EAST SIDE OF LAKE DRIVE 1ST HYDRANT SOUTH OF 441 BRIDGE	756.237

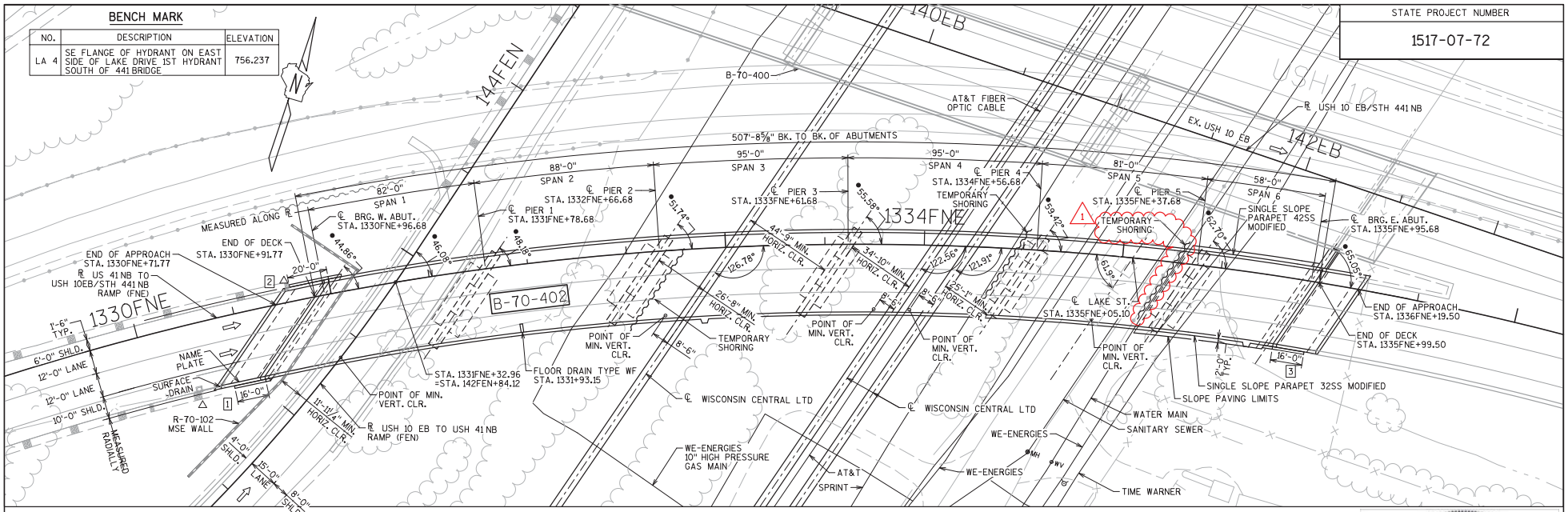

PLAN

6-SPAN - 45W" PRESTRESSED GIRDERS

William C. Dreher KAR 04/20/14

Addendum No. 1
ID 1517-07-72
Revised Sheet 348
May 5, 2014

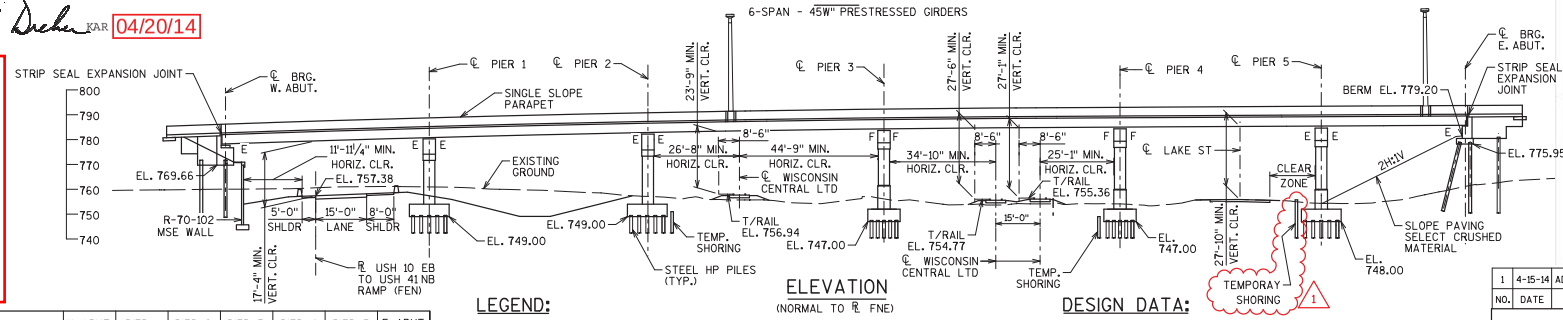

ELEVATION

(NORMAL TO ℄ FNE)

LOCATION	W. ABUT.	PIER 1	PIER 2	PIER 3	PIER 4	PIER 5	E. ABUT.
ESTIMATED DRIVEN PILES LENGTH (FEET)	38	19	18.6	15.5	12.5	14.5	45
ESTIMATED PRE BORED PILES LENGTH (FEET)	0	SEE SHEET 26 "FOOTING DETAILS"					0

LEGEND:

F - FIXED BEARING

E - EXPANSION BEARING

△ - ANCHOR ASSEMBLY FOR STEEL PLATE BEAMGUARD ATTACHMENT

● - ANGLE MEASURED TO T/L TO CURVE AT INTERSECTION

[1] - WING NUMBER

TRAFFIC VOLUME:

RAMP "FNE"
ADT (2038) = 19,000
R.D.S. = 55 M.P.H.

RAMP "FEN"
ADT (2038) = 2,600
R.D.S. = 50 M.P.H.

DESIGN DATA:

DESIGN LIVE LOAD:

DESIGN LIVE LOADING: HL-93
INVENTORY RATING FACTOR: 1.09
OPERATING RATING FACTOR: 1.81
WISCONSIN STANDARD PERMIT VECHICLE (WIS-SPV): 226 KIPS
SEE SHEET 2 "GENERAL NOTES, LIST OF DRAWINGS & QUANTITIES" FOR OTHER DESIGN LOADS

ULTIMATE DESIGN STRESSES:

CONCRETE MASONRY, HIGH PERFORMANCE CONCRETE
SLAB----------f'c = 4,000 P.S.I.
ALL OTHER----------f'c = 4,000 P.S.I.
BAR STEEL REINFORCEMENT, GRADE 60-------fy = 60,000 P.S.I.

45W" PRESTRESSED GIRDERS
CONCRETE MASONRY----------f'c = 8,000 P.S.I.
----------f'ci = 6,800 P.S.I.
STRANDS - 0.6"Φ WITH ULTIMATE TENSILE STRENGTH OF 270,000 P.S.I.

NE REGION CONTACT: SCOTT EBEL (920) 492-2240
BUREAU OF STRUCTURES CONTACT: WILLIAM DREHER (608) 266-8489
CONSULTANT CONTACT: MICHAEL ARNOLD (414) 831-4179

NOTES:

DIMENSIONS SHOWN ARE ALONG ℄ FNE.

SPAN LENGTHS SHOWN ARE MEASURED ALONG ℄ FNE.

FOR CURVE DATA SEE SHEET 4 "ALIGNMENT, PROFILE & SUPERELEVATION".

EXISTING AND FUTURE UTILITIES ARE SHOWN FOR INFORMATION ONLY. THE CONTRACTOR IS RESPONSIBLE FOR IDENTIFYING ALL UTILITIES PRIOR TO EXCAVATION OR PILE DRIVING.

SEE SHEET 37 "LIGHT STANDARD" FOR LIGHT POLE LOCATIONS AND DETAILS.

RAMP "FEN" WILL NOT BE CONSTRUCTED UNDER THIS CONTRACT.

FOUNDATION DATA:

EAST ABUTMENT TO BE SUPPORTED ON HP12X53 STEEL PILING DRIVEN TO A REQUIRED DRIVING RESISTANCE OF 175* TONS PER PILE AS DETERMINED BY THE MODIFIED GATES DYNAMIC EQUATION. SEE TABLE ON THIS SHEET FOR ESTIMATED LENGTH OF PILES.

WEST ABUTMENT TO BE SUPPORTED ON HP14X73 STEEL PILING DRIVEN TO A REQUIRED DRIVING RESISTANCE OF 200* TONS PER PILE AS DETERMINED BY THE MODIFIED GATES DYNAMIC EQUATION. SEE TABLE ON THIS SHEET FOR ESTIMATED LENGTH OF PILES.

PIERS 1 THRU 5 TO BE SUPPORTED ON HP12X53 STEEL PILING DRIVEN TO A REQUIRED DRIVING RESISTANCE OF 220* TONS PER PILE AS DETERMINED BY THE MODIFIED GATES DYNAMIC EQUATION. SEE TABLE ON THIS SHEET FOR ESTIMATED LENGTH. PILES FOR PIERS 1 THRU 5 SUBJECT TO UPLIFT LOADS ARE PRE-BORED AND SOCKETED INTO SOLID ROCK A MINIMUM OF 3'-0".

* THE FACTORED AXIAL RESISTANCE OF PILES IN COMPRESSION USED FOR DESIGN IS THE REQUIRED DRIVING RESISTANCE MULTIPLIED BY A RESISTANCE FACTOR OF 0.5 USING THE MODIFIED GATES DYNAMIC EQUATION.

WISCONSIN NARENDRA P. PATEL 38246-006 CHICAGO, IL PROFESSIONAL ENGINEER
Narendra Patel 4-15-2014

NO.	DATE	REVISION	BY
1	4-15-14	ADDED TEMPORARY SHORING AT PIER 5	KJZ

URS
342 North Water Street
7th Floor
Milwaukee, WI 53202
(414) 831-4100

STATE OF WISCONSIN
DEPARTMENT OF TRANSPORTATION

ACCEPTED _____ CHIEF STRUCTURES DESIGN ENGINEER _____ DATE

STRUCTURE B-70-402

USH 41 NB TO USH 10 EB/STH 441 NB OVER WCL

COUNTY WINNEBAGO TOWN/~~CITY/VILLAGE~~ MENASHA

DESIGN SPEC. AASHTO LRFD DESIGN SPEC.

DESIGNED BY PMV DESIGN CK'D. NPP DRAWN BY PMV PLANS CK'D. NPP

GENERAL PLAN

SHEET 1 OF 52

348

FILE= Q:\WisDOT_12345678_10-441\Plans\B-70-402\Control Copy\001-B-70-402 - General Plan .dgn

DATE: 4/15/2014
I.D.

8

8

STATE PROJECT NUMBER
1517-07-72

LIST OF DRAWINGS

1 GENERAL PLAN
2 GENERAL NOTES, LIST OF DRAWINGS & QUANTITES
3 CROSS SECTIONS
4 ALIGNMENT, PROFILES & SUPERELEVATION
5 SUBSURFACE EXPLORATION
6 WEST ABUTMENT PLAN & ELEVATION
7 WEST ABUTMENT LAYOUT
8 WEST ABUTMENT CROSS SECTION
9 WEST ABUTMENT WING 2
10 WEST ABUTMENT WING 3
11 EAST ABUTMENT PLAN & ELEVATION
12 EAST ABUTMENT LAYOUT
13 EAST ABUTMENT CROSS SECTIONS
14 EAST ABUTMENT WING 1
15 ABUTMENTS BILL OF BARS
16 PIER 1 LAYOUT DETAILS
17 PIER 2 LAYOUT DETAILS
18 PIER 3 LAYOUT DETAILS
19 PIER 4 LAYOUT DETAILS
20 PIER 5 LAYOUT DETAILS
21 PIER CAP DETAILS PIER 1
22 PIER CAP DETAILS PIERS 2 & 3
23 PIER CAP DETAILS PIERS 4 & 5
24 SHAFT DETAILS PIERS 1 & 2
25 SHAFT DETAILS PIERS 3 TO 5
26 FOOTING DETAILS
27 BILL OF BARS PIERS
28 BEARINGS FOR PRESTRESSED GIRDERS
29 45W" PRESTRESSED GIRDER DETAILS 1
30 45W" PRESTRESSED GIRDER DETAILS 2
31 INTERMEDIATE STEEL DIAPHRAGMS
32 FRAMING PLAN
33 LAYOUT LINE OFFSET DETAILS
34 DECK REINFORCEMENT
35 TYPICAL DECK REINF. CROSS SECTION
36 SUPERSTRUCTURE DETAILS
37 LIGHT STANDARD
38 SUPERSTRUCTURE BILL OF BARS
39 TOP OF DECK ELEVATIONS
40 SINGLE SLOPE PAPAPET "32SS" E. ABUT.
41 SINGLE SLOPE PAPAPET "32SS" W. ABUT.
42 SINGLE SLOPE PAPAPET "42SS" E. ABUT.
43 SINGLE SLOPE PAPAPET "42SS" W. ABUT.
44 STRUCTURAL APPROACH SLAB DETAILS W. ABUT.
45 STRUCTURAL APPROACH SLAB DETAILS E. ABUT.
46 STRIP SEAL EXP. JOINT DETAILS AT ABUTMENTS
47 STRIP SEAL COVER PLATE DETAILS
48 FLOOR DRAIN TYPE "WF"
49 AESTHETIC DETAILS
50 SLOPE PAVING SELECT CRUSHED MATERIAL
51 ALTERNATE CONSTRUCTION JOINT
52 PARAPET "32SS" ELECTRICAL WORK

GENERAL NOTES

DO NOT SCALE DRAWINGS.

ALL DIMENSIONS ARE IN SURVEY FEET AND SURVEY INCHES. ALL STATIONS ARE IN SURVEY FEET.

ELEVATIONS ON THIS PLAN ARE REFERENCED TO THE NORTH AMERICAN VERTICAL DATUM OF 1988 (NAVD 91).

THE UTILITY INFORMATION SHOWN ON THESE DRAWINGS CONCERNING TYPE AND LOCATION OF UNDERGROUND UTILITIES IS NOT GUARANTEED TO BE ACCURATE OR CONSIDERED ALL-INCLUSIVE. THE CONTRACTOR IS RESPONSIBLE FOR MAKING THEIR OWN DETERMINATION AS TO TYPE AND LOCATION OF UNDERGROUND UTILITIES.

JOINT FILLER SHALL CONFORM TO THE REQUIREMENTS OF AASHTO DESIGNATION M153, TYPE I, II, OR III OR M213.

THE EXISTING GROUND LINE IS THE UPPER LIMIT OF EXCAVATION FOR STRUCTURES.

AT ABUTMENTS AND PIERS, BACKFILL ALL EXCAVATED VOLUME NOT OCCUPIED BY NEW STRUCTURE WITH BACKFILL STRUCTURE.

THE GRADATION OF THE STRUCTURE BACKFILL SHALL MEET THE REQUIREMENTS OF SECTION 209.2.2 OF THE STANDARD SPECIFICATIONS FOR GRADE 1 MATERIAL.

ELASTOMERIC BEARING PADS NEED NOT BE INDIVIDUALLY MOLDED PROVIDED THE CUT EDGES ARE SMOOTH AND TRUE.

THE SLOPE OF THE FILL IN FRONT OF THE EAST ABUTMENT SHALL BE COVERED WITH SLOPE PAVING MATERIAL TO THE EXTENT SHOWN ON SHEET 1 "GENERAL PLAN AND ELEVATION".

REINFORCING STEEL

ALL REINFORCING BARS ARE ENGLISH AND THE FIRST OR THE FIRST TWO DIGITS OF THE BAR MARK SIGNIFY THE BAR SIZE.

REINFORCING STEEL SHALL BE HIGH STRENGTH, GRADE 60 WITH FY=60 KSI. AT APPROACH APRON CONNECTION TO ABUTMENT PROVIDE STAINLESS STEEL REINFORCEMENT CONFORMING TO ASTM A955, GRADE 60 REQUIREMENTS.

REINFORCING STEEL SHALL BE UNCOATED IN FOOTINGS (EXCEPT PIER SHAFT DOWELS) AND EPOXY COATED IN ALL OTHER LOCATIONS (INCLUDING PIER SHAFT DOWELS).

PLACE ALL REINFORCEMENT WITH A MINIMUM CLEAR COVER OF 2" UNLESS NOTED OTHERWISE.

PLACE REINFORCEMENT IN FOOTINGS AND PILECAPS WITH A MINIMUM CLEAR COVER OF 3" BOTTOM AND 2" TOP AND SIDES UNLESS NOTED OTHERWISE.

PLACE TOP LAYER OF REINFORCING STEEL IN THE DECK SURFACE WITH 2½" CLEAR COVER TO TOP OF SLAB.

PLACE BOTTOM LAYER OF REINFORCING STEEL IN THE DECK WITH 1½" CLEAR COVER TO BOTTOM OF SLAB.

ONLY REINFORCEMENT REQUIRED BY DESIGN IS SHOWN EXPLICITLY ON THE DRAWINGS. ADDITIONAL REINFORCEMENT MAY BE USED TO SIMPLIFY ASSEMBLY AND ERECTION OF THE REINFORCING STEEL AND MAY BE REQUIRED TO ENSURE STABILITY AND POSITIONING OF THE COMPLETED REINFORCEMENT CAGE. REINFORCEMENT IN ADDITION TO THAT SHOWN WILL NOT BE INCLUDED FOR PAYMENT.

LAP SPLICE LENGTHS SHALL BE CLASS C UNLESS NOTED OTHERWISE.

CONCRETE

CONCRETE QUANTITY IN THE HAUNCHES IS CALCULATED BASED ON AN AVERAGE HAUNCH DEPTH PROVIDED ON THE DRAWINGS. THIS IS THE MAXIMUM HAUNCH QUANTITY FOR WHICH PAYMENT WILL BE MADE.

CHAMFER ALL EXPOSED OUTSIDE CORNERS ¾" UNLESS NOTED OTHERWISE.

PROTECTIVE SURFACE TREATMENT TO BE APPLIED TO THE ENTIRE TOP OF DECK SURFACE AND THE FRONT FACE AND THE TOP OF THE PARAPET, INCLUDING PARAPETS ON ABUTMENT BACKWALLS AND STRUCTURAL APPROACH SLABS. DO NOT SEAL SURFACES WHERE THE PLANS OF SPECIAL PROVISIONS REQUIRE STAINING OR OTHER TREATMENT.

CONCRETE FOR ABUTMENT AND PIER DIAPHRAGMS SHALL BE PLACED WITH THE DECK CONCRETE. NO OPTIONAL CONSTRUCTION JOINT WILL BE PERMITTED.

OTHER DESIGN LOADS

THE STRUCTURE IS DESIGNED FOR THE DECK THICKNESS SHOWN. DEAD LOAD OF 5 PSF IS CONSIDERED FOR POLYMER OVERLAY AND AN ADDITIONAL LOAD OF 20 PSF FOR A FUTURE WEARING SURFACE IS CONSIDERED IN THE DESIGN.

TEMPERATURE CHANGE FOR DETERMINING THERMAL FORCES ON SUBSTRUCTURES = 45°F.

DESIGN ASSUMED 7.5 PSF FOR TEMPORARY FORMWORK.

PARAPETS WERE ASSUMED TO WEIGH 639 PLF AND 516 PLF FOR 42SS MODIFIED AND 32SS MODIFIED SECTIONS RESPECTIVELY.

ALL OTHER LOADS IN ACCORDANCE WITH AASHTO.

DESIGN CRITERIA

DESIGN IS IN ACCORDANCE WITH AMERICAN ASSOCIATION OF STATE HIGHWAY AND TRANSPORTATION OFFICIALS (AASHTO) LRFD BRIDGE DESIGN SPECIFICATIONS, AND THE WISDOT BRIDGE MANUAL.

ALL DETAILS, MATERIALS, AND FABRICATION SHALL CONFORM TO THE THE STATE OF WISCONSIN STANDARD SPECIFICATIONS FOR HIGHWAY AND STRUCTURE CONSTRUCTION. USE THE CURRENT EDITION OF THE STANDARD SPECIFICATIONS AT THE TIME OF CONSTRUCTION.

LIVE LOAD PLUS DYNAMIC LOAD DEFLECTION LIMIT = SPAN / 800 (HL93).

TOTAL ESTIMATED QUANTITIES

	BID ITEM #	BID ITEM	UNIT	W. STRUCTURAL APPROACH SLAB	W. ABUT.	SUPER. SPANS 1-6	PIER 1	PIER 2	PIER 3	PIER 4	PIER 5	E. ABUT	E. STRUCTURAL APPROACH SLAB	TOTAL
	206.1000	EXCAVATION FOR STRUCTURES BRIDGES B-70-402	LS	-	-	-	-					-	-	1
	206.6000.S	TEMPORARY SHORING	SF	-	-	-	-	369	-	369	369	1	-	1,107
	210.0100	BACKFILL STRUCTURE	CY	-	216	-	-					187	-	404
	305.0120	BASE AGGREGATE DENSE 1 1/4-INCH	TON	-	153	-	-	-	-	-	-	154	-	307
	502.3100	EXPANSION DEVICE B-70-402	LS	-	-	-	-	-	-	-	-	-	-	1
	502.3200	PROTECTIVE SURFACE TREATMENT	SY	109	-	2684	-	-	-	-	-	-	108	2,901
	503.0146	PRESTRESSED GIRDER TYPE I 45W-INCH	LF			2507								2,507
	505.0405	BAR STEEL REINFORCEMENT HS BRIDGES	LB		6,812		9,386	9,818	9,237	9,237	9,818	5,777		60,084
	505.0605	BAR STEEL REINFORCEMENT HS COATED BRIDGES	LB	9,379	3,609	200,228	38,931	38,489	40,981	39,876	39,352	2,719	8,714	422,279
	506.2605	BEARING PADS ELASTOMERIC NON-LAMINATED	EACH						10	10				20
	506.4000	STEEL DIAPHRAGMS B-70-402	EACH			48								48
	506.6000	BEARING ASSEMBLIES EXPANSION B-70-402	EACH		5		10	10	0	0	10	5		40
	509.5100.S	POLYMER OVERLAY	SY	100		2250							93	2,443
	514.0450	FLOOR DRAINS TYPE WF	EACH	-			1						-	1
	516.0500	RUBBERIZED MEMBRANE WATERPROOFING	SY	-	26	-		-		-		19	-	45
	517.1010.S.700	CONCRETE STAINING B-70-402	SF		689	13,599	1,921	1,892	2,053	1,994	1,956	479		24,583
	517.1050.S.700	ARCHITECTURAL SURFACE TREATMENT B-70-402	SF		676	2,294						473		3,444
*	550.0020	PRE-BORING ROCK OR CONSOLIDATED MATERIALS	LF				0	340	326	272	274			1,212
	550.0500	PILE POINTS	EACH		12		22	12	14	14	12	25		111
*	550.1120	PILING STEEL HP 12-INCH X 53 LB	LF				418	579	561	465	464	1,126		3,613
**	551.1140	PILING STEEL HP 14-INCH X 73 LB	LF		456									456
	604.0600	SLOPE PAVING SELECT CRUSHED MATERIAL	SY		33	-	-	-	-	-	-	386		419
	614.0150	ANCHOR ASSEMBLIES FOR STEEL PLATE BEAM GUARD	EACH	2	-		-	-	-	-	-	-	-	2
	652.0125	CONDUIT RIGID METALLIC 2-INCH	LF	35									35	70
	652.0225	CONDUIT RIGID NONMETALLIC SCHEDULE 40 2-INCH	LF	-	-	514	-	-	-	-	-	-	-	514
	653.0222	JUNCTION BOXES 18X12X6-INCH	EACH		1		1	1	-	1	-	1		5
	657.6005.S	ANCHOR ASSEMBLIES LIGHT POLES ON STRUCTURES	EACH			2								2
	SPV.0035.700	HIGH PERFORMANCE CONCRETE (HPC) MASONRY STRUCTURES	CY	65	140	981	239	236	227	224	242	139	62	2555
	SPV.0085.800	BAR STEEL REINFORCEMENT HS STAINLESS BRIDGES	LB	-	731	-		-		-		748	-	1,479
	SPV.0165.853	TEMPORARY SHORING LEFT IN PLACE	SF									189		189
	NON-BID ITEMS	BRIDGE SEAT PROTECTION AND FILLERS												

* BID ITEM "PRE-BORING ROCK OR CONSOLIDATED MATERIALS" INCLUDES DRILLING THE PRE-BORING HOLES, FOR FURNISHING, INSTALLING AND REMOVING CASING IF NECESSARY, FOR BACKFILLING AND DISPOSING OF EXCESS MATERIAL. PROVIDING PILES AND SETTING PILES IN PRE-BORED HOLES IS INCLUDED WITH BID ITEM "PILING STEEL HP 12-INCH X 53 LB".

** PILES PLACED IN PREBORED HOLES CORED INTO SOLID ROCK DO NOT REQUIRE DRIVING.

Addendum No. 1
ID 1517-07-72
Revised Sheet 349
May 5, 2014

WISCONSIN
NARENDRA P. PATEL
38246-006
CHICAGO, IL
PROFESSIONAL ENGINEER
Narendra P. Patel
4-15-2014

William C. Dreher KAR 04/20/14

NO.	DATE	REVISION	BY
1	4-15-14	REVISED TEMPORARY SHORING QUANTITY	KJZ

STATE OF WISCONSIN
DEPARTMENT OF TRANSPORTATION

STRUCTURE B-70-402

DRAWN BY PMV | PLANS CK'D. NPP

GENERAL NOTES, LIST OF DRAWINGS & QUANTITIES

SHEET 2 OF 52

349

8

8

FILE= Q:\WisDOT_12345678_10-441\Plans\B-70-402\Control Copy\002-B-70-402 - General Notes, List of Drwg & Quantities.dgn

DATE: 4/15/2014
I.D.

STATE PROJECT NUMBER
1517-07-72

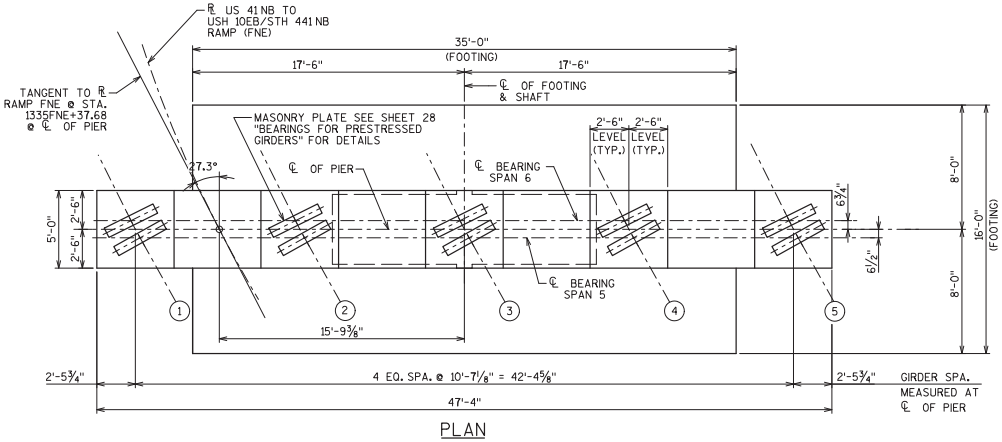

PLAN

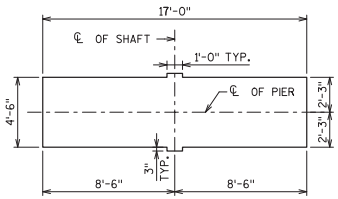

SECTION A-A

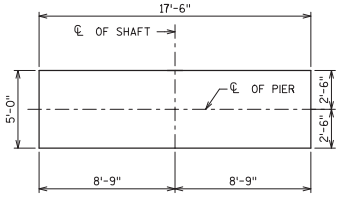

SECTION B-B

(AT PEDESTAL)

Addendum No. 1
ID 1517-07-72
Revised Sheet 367
May 5, 2014

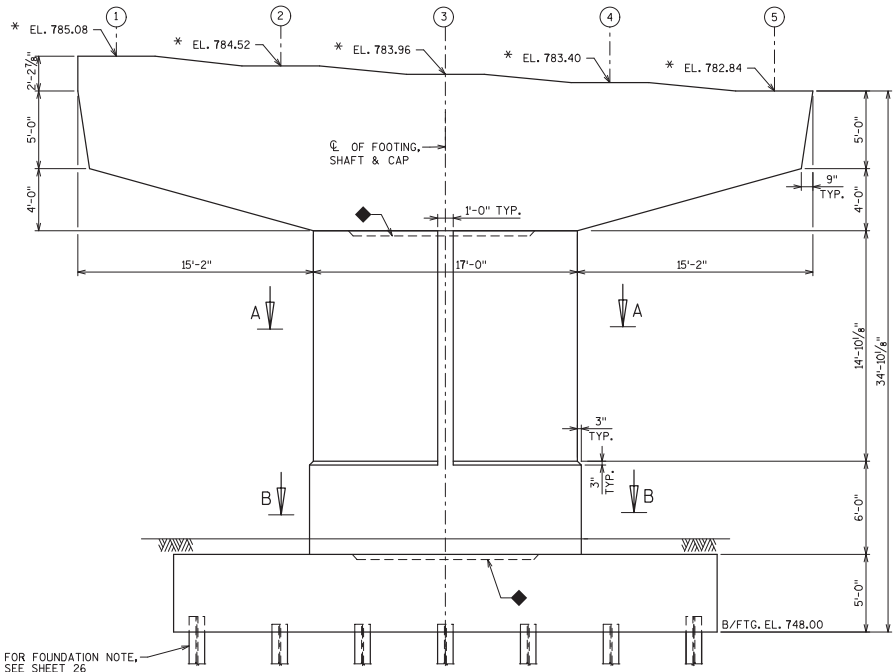

ELEVATION

(LOOKING UPSTATION)

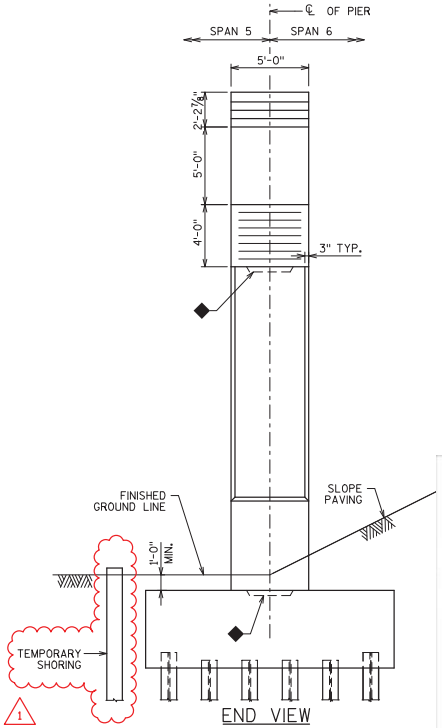

END VIEW

(LOW SIDE SHOWN, HIGH SIDE SIMILAR)

LEGEND

◆ KEYED CONST. JOINT FORMED BY BEVELED 4" X 1'-6" X 13'-0".

* ELEVATIONS ARE GIVEN FOR PIER 5: SPAN 6 BEAM SEAT. BEARINGS AT PIER 5: SPAN 5 WILL REQUIRE FILL PLATES. SEE SHEET 28 "BEARINGS FOR PRESTRESSED GIRDERS" FOR DETAILS.

NOTES

FOR BAR STEEL REINFORCEMENT DETAILS, SEE SHEET 27 "BILL OF BARS PIERS".

FOR FOOTING LAYOUT DETAILS. SEE SHEET 26 "FOOTING DETAILS".

SEE SHEET 49 "AESTHETIC DETAILS" FOR PIER AESTHETIC TREATMENTS.

WISCONSIN NARENDRA P. PATEL 38246-006 CHICAGO, IL PROFESSIONAL ENGINEER

Narendra Patel 4-15-2014

William C. Dreher KAR 04/20/14

NO.	DATE	REVISION	BY
1	4-15-14	ADDED TEMPORARY SHORING AT PIER 5	KJZ

STATE OF WISCONSIN
DEPARTMENT OF TRANSPORTATION

STRUCTURE B-70-402

DRAWN BY KJZ | PLANS CK'D. NPP

PIER 5 LAYOUT DETAILS

SHEET 20 OF 52

367

8

8

FILE= Q:\WisDOT_12345678_10-441\Plans\B-70-402\Control Copy\020-B-70-402 - Pier 5 Layout Details.dgn

DATE: 4/15/2014
I.D.

STATE PROJECT NUMBER

1517-07-72

Addendum No. 1
ID 1517-07-72
Revised Sheet 404
May 5, 2014

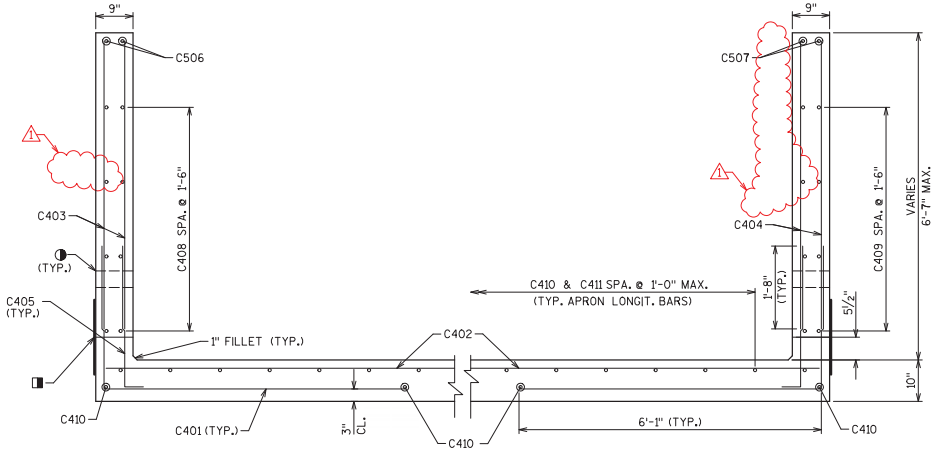

WING 1

WING 2

SECTION THRU WINGWALLS

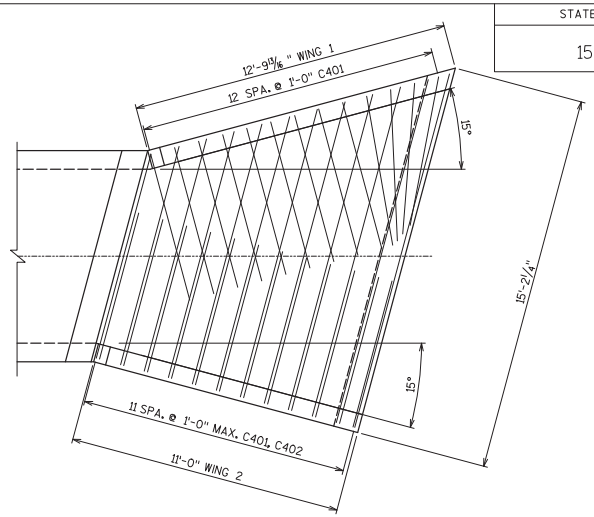

PLAN VIEW - APRON

TRANSVERSE BARS

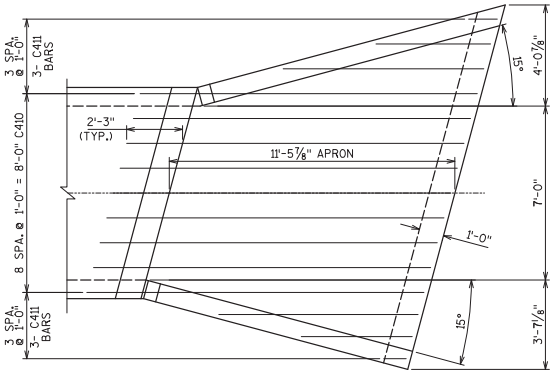

PLAN VIEW - APRON

LONGITUDINAL BARS

William C. Drehen KAR 04/20/14

WISCONSIN
MICHAEL J. ARNOLD
E-41717
GREENDALE
WI
PROFESSIONAL ENGINEER

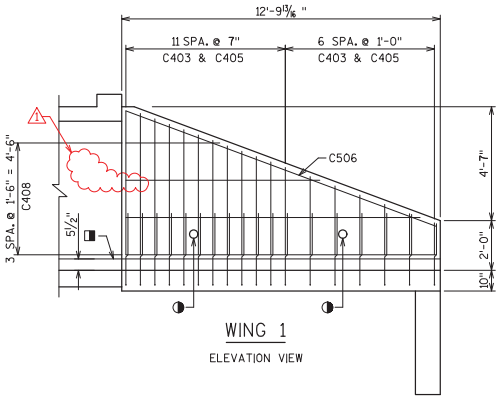

WING 1

ELEVATION VIEW

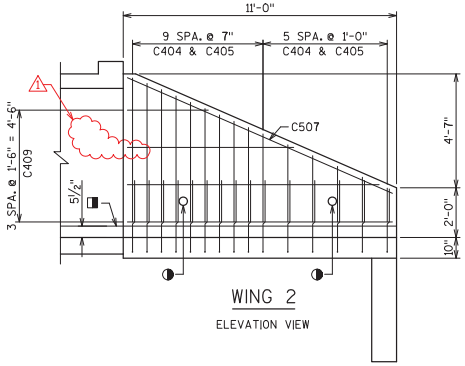

WING 2

ELEVATION VIEW

LEGEND

18" MIN. WIDTH RUBBERIZED MEMBRANE WATER-PROOFING FROM HORIZ. CONSTR. JT. TO TOP OF WINGWALL & ALONG HORIZ. CONSTR. JT. IN WING.

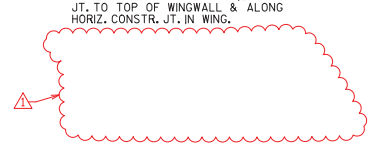

4" DIA. WEEP HOLES @ APPROX. 6'-0" CTRS LOCATE AT APPROX. 1'-0" ABOVE NORMAL WATER LEVEL OR CONSTR. JT., WHICHEVER IS HIGHER. PLACE A SMALL PIECE OF GEOTEXTILE OVER WEEP HOLES TO PREVENT MIGRATION OF FINES.

NOTES

SEE "CULVERT DETAILS" FOR BILL OF BARS

BAR STEEL SHALL BE EMBEDDED 2" CLEAR UNLESS SHOWN OR NOTED OTHERWISE.

NO.	DATE	REVISION	BY
1	4.17.14	REMOVED WING/BOX DOWEL BAR	MJA

STATE OF WISCONSIN
DEPARTMENT OF TRANSPORTATION

STRUCTURE C-70-42

DRAWN BY MRL PLANS CK'D. MJA

APRON & WINGWALL DETAILS

SHEET 5 OF 7

404

FILE= P:\Transportation\US 10 WIS 441\CADD\sheets\Structures\C-70-42\Sheets\Final\05-C-70-42_Apron.dgn

DATE: 4/17/2014
I.D.

8

8

STATE PROJECT NUMBER
1517-07-72

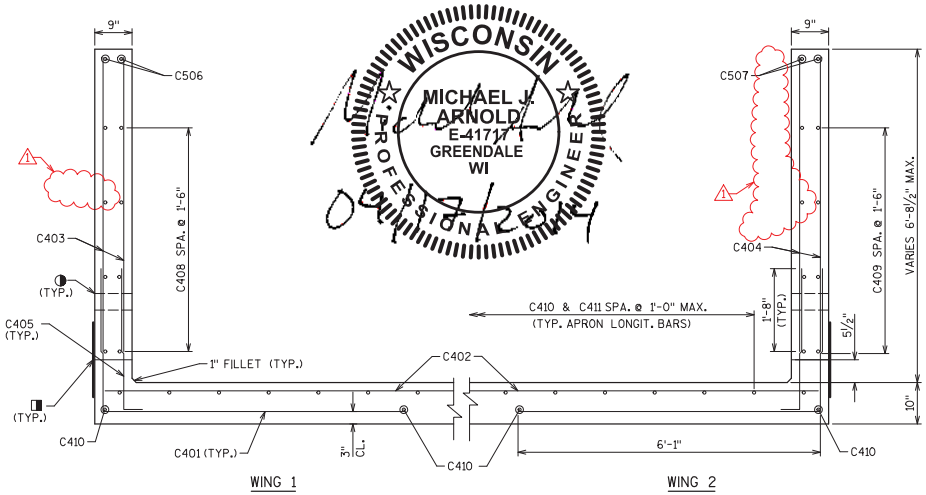

SECTION THRU WINGWALLS

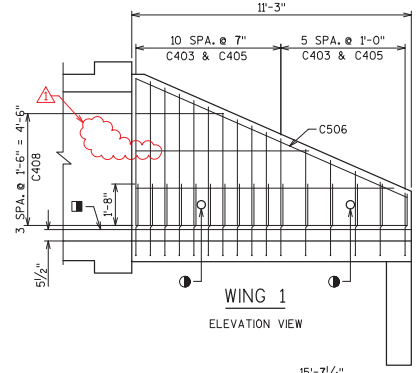

WING 1

ELEVATION VIEW

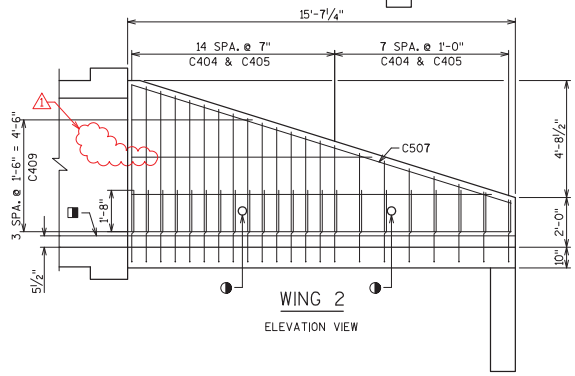

WING 2

ELEVATION VIEW

William C. Dreher KAR 04/20/14

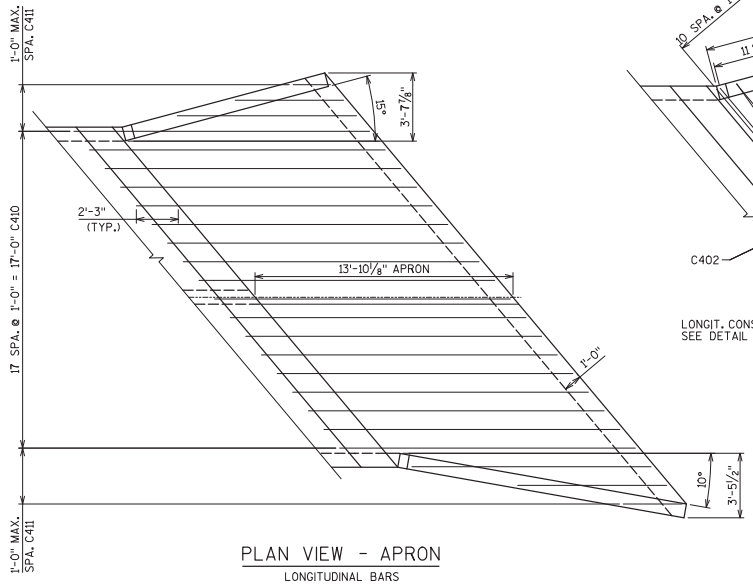

PLAN VIEW - APRON

LONGITUDINAL BARS

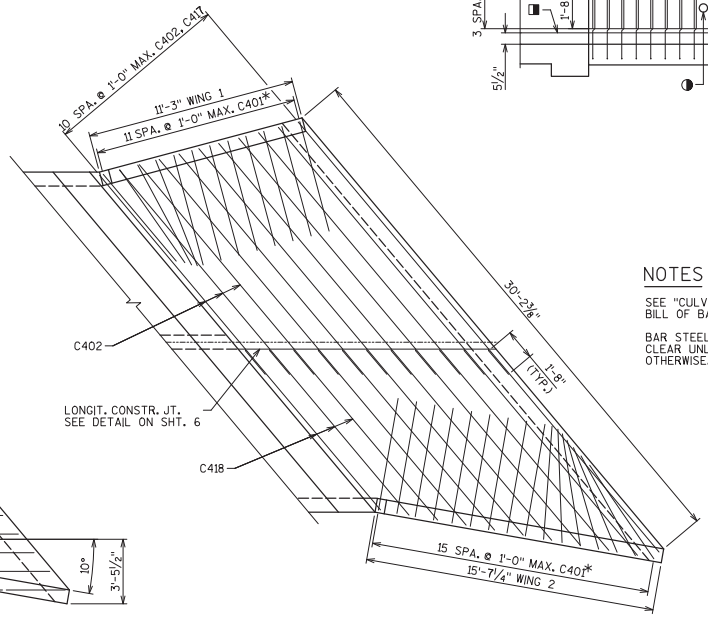

PLAN VIEW - APRON

TRANSVERSE BARS

NOTES

SEE "CULVERT DETAILS" SHEET FOR BILL OF BARS.

BAR STEEL SHALL BE EMBEDDED 2" CLEAR UNLESS SHOWN OR NOTED OTHERWISE.

LEGEND

◨ 18" MIN. WIDTH RUBBERIZED MEMBRANE WATER-PROOFING FROM HORIZ. CONSTR. JT. TO TOP OF WINGWALL & ALONG HORIZ. CONSTR. JT. IN WING.

* SPACE FANNED C401 BARS A MIN. OF 2¼".

◑ 4" DIA. WEEP HOLES @ APPROX. 6'-0" CTRS LOCATE AT APPROX. 1'-0" ABOVE NORMAL WATER LEVEL OR CONSTR. JT., WHICHEVER IS HIGHER. PLACE A SMALL PIECE OF GEOTEXTILE OVER WEEP HOLES TO PREVENT MIGRATION OF FINES.

Addendum No. 1
ID 1517-07-72
Revised Sheet 411
May 5, 2014

NO.	DATE	REVISION	BY
1	4.17.14	REMOVED WING/BOX DOWEL BAR	MJA

STATE OF WISCONSIN
DEPARTMENT OF TRANSPORTATION

STRUCTURE C-70-54

DRAWN BY MRL | PLANS CK'D. MJA

APRON & WINGWALL DETAILS

SHEET 5 OF 7

411

8

FILE: P:\Transportation\US 10 WIS 441\CADD\sheets\Structures\C-70-54\Sheets\Final\05-C-70-54_Apron.dgn

DATE: 4/17/2014
I.D.

STATE PROJECT NUMBER
1517-07-72

GEOMETRY TABLE

WALL STATION	USH 41 NB STATION	OFFSET TO R/L OF WALL	TOP OF WALL	FINISHED GRADE
0+50.00	1364+56.33	56.75	748.69	741.92
0+75.00	1364+81.33	56.75	748.53	742.24
1+00.00	1365+06.33	56.75	748.44	742.37
1+25.00	1365+31.33	56.75	748.30	742.49
1+50.00	1365+56.33	56.75	748.14	742.62
1+75.00	1365+81.33	56.75	748.13	742.79
2+00.00	1366+06.33	56.75	748.17	743.13
2+25.00	1366+31.33	56.75	748.30	743.46
2+50.00	1366+56.33	56.75	748.46	743.80
2+75.00	1366+81.33	56.75	748.68	744.13
3+00.00	1367+06.33	56.75	748.89	744.47
3+25.00	1367+31.33	56.75	749.04	744.80
3+50.00	1367+56.33	56.75	749.22	745.14
3+53.30	1367+59.63	56.75	749.23	745.18
3+75.00	1367+81.32	56.03	749.33	745.47
4+00.00	1368+06.30	55.19	749.51	745.81
4+25.00	1368+31.29	54.36	749.69	746.14
4+50.00	1368+56.28	53.53	749.87	746.48
4+75.00	1368+81.26	52.69	750.01	746.81
5+00.00	1369+06.25	51.86	750.17	747.14
5+25.00	1369+31.24	51.03	750.34	747.47
5+50.00	1369+56.22	50.20	750.47	747.82
5+75.00	1369+81.21	49.36	750.58	748.21
6+00.00	1370+06.20	48.53	750.70	748.60
6+25.00	1370+31.18	47.70	750.88	748.98
6+50.00	1370+56.17	46.86	751.03	749.70
6+68.87	1370+75.03	46.24	751.07	751.02

UNIT 2, UNIT 3, UNIT 1

TOTAL ESTIMATED QUANTITIES

BID ITEM #	BID ITEM	UNIT	TOTAL
206.3000	EXCAVATION FOR STRUCTURES RETAINING WALLS R-70-115	LS	1
210.0100	BACKFILL STRUCTURE	CY	198
502.3200	PROTECTIVE SURFACE TREATMENT	SY	350
504.0500	CONCRETE MASONRY RETAINING WALLS	CY	334
505.0615	BAR STEEL REINFORCEMENT HS COATED RETAINING WALLS	LB	38,900
516.0500	RUBBERIZED MEMBRANE WATERPROOFING	SY	29
550.1100	PILING STEEL HP 10-INCH X 42 LB	LF	560
612.0406	PIPE UNDERDRAIN WRAPPED 6-INCH	LF	630
614.0150	ANCHOR ASSEMBLIES FOR STEEL PLATE BEAM GUARD	EACH	1
652.0125	CONDUIT RIGID METALLIC 2-INCH	LF	126
652.0225	CONDUIT RIGID NONMETALLIC SCHEDULE 40 2-INCH	LF	496
653.0222	JUNCTION BOXES 18X12X6-INCH	EACH	6
657.6005.S	ANCHOR ASSEMBLIES LIGHT POLES ON STRUCTURES	EACH	3
SPV.0165.850	PRESTRESSED PRECAST CONCRETE WALL PANEL	SF	370
SPV.0165.851	WALL CONCRETE PANEL MECHANICALLY STABILIZED EARTH LRFD/QMP PILOT	SF	2,625
SPV.0165.852	WALL WIRE FACED MECHANICALLY STABILIZED EARTH LRFD/QMP PILOT	SF	370
	NON BID ITEMS		
	FILLER	SIZE	1/2" & 1"
	NAME PLATE	EACH	1
	EXPANDED POLYSTYRENE	SIZE	1"

SOIL PARAMETERS

BORING R115-G1 (STATION NO. NB1367+00)					
STRATUM LOCATION & SOIL DESCRIPTIONS	UNIT WEIGHT (PCF)	UNDRAINED PARAMETERS		DRAINED PARAMETERS	
		COHESION, C PSF	FRICTION ANGLE, DEGREES	COHESION, C' PSF	FRICTION ANGLE, DEGREES
GRANULAR BACKFILL (WITHIN REINFORCING ZONE)	120	NA	NA	0	30
FILL BEHIND AND BELOW THE REINFORCING ZONE	125	1000	0	0	30
LEAN/FAT CLAY (EL. 735 TO EL. 745)	120	1000	0	0	26
FAT CLAY (EL. 731 TO EL. 735)	110	600	0	0	24
SILTY SAND (EL. 692 TO EL. 731)	125	NA	NA	0	30
GRAVEL WITH SAND (BELOW EL. 692)	140	NA	NA	0	36
ASSUMED DESIGN GROUNDWATER ELEVATION = 738.0					

BORING R115-G2 (STATION NO. NB1370+00)					
STRATUM LOCATION & SOIL DESCRIPTIONS	UNIT WEIGHT (PCF)	UNDRAINED PARAMETERS		DRAINED PARAMETERS	
		COHESION, C PSF	FRICTION ANGLE, DEGREES	COHESION, C' PSF	FRICTION ANGLE, DEGREES
GRANULAR BACKFILL (WITHIN REINFORCING ZONE)	120	NA	NA	0	30
FILL BEHIND AND BELOW THE REINFORCING ZONE	125	1000	0	0	30
LEAN CLAY (EL. 741 TO EL. 745)	120	1500	0	0	28
M. STIFF FAT CLAY (EL. 734 TO EL. 741)	115	1000	0	0	26
SOFT FAT CLAY (EL. 725 TO EL. 734)	100	500	0	0	24
SILTY SAND (BELOW EL. 725)	120	NA	NA	0	30
ASSUMED DESIGN GROUNDWATER ELEVATION = 738.0					

BENCHMARK

NO.	DESCRIPTION	ELEVATION
41E	WIS DOT DISK IN SE PARAPET WALL OF 41 BRIDGE OVER CREEK, NORTH OF 441 BRIDGE	751.32
LA5	NE FLANGE BOLT HYD ON EAST SIDE OF LAKE DRIVE BETWEEN HSE#'S 1761 & 1749	746.14

WALL EXTERNAL AND OVERALL STABILITY EVALUATION

WALL DIMENSIONS		
MAX. WALL HEIGHT [1] (FEET)	7.5	4.5
MAX. EXPOSED WALL HEIGHT (FEET)	6.0	3.0
** MIN. LENGTH OF REINFORCEMENT (FEET)	10.0	8.0 [2]
RATIO OF REIN./WALL HEIGHT	1.33	N/A [2]
DESIGN SLOPE ANGLE AT FRONT (DEGREE)	0	0
DESIGN SLOPE ANGLE AT BACK (DEGREE)	0	0
WALL SECTION FOR ANALYSIS	1+25	5+00
APPLICABLE WALL STATION RANGE	1+00 TO 5+00	5+00 TO 6+69
APPLIED BORING LOG	R115-G1	R115-G2
CAPACITY TO DEMAND RATIO [3] (*1.0) AND FACTORED BEARING RESISTANCE [3] (PSF)		
GLOBAL STABILITY	1.0*	1.2
ECCENTRICITY	2.8	3.3
SLIDING	1.6	1.7
BEARING CAPACITY	1.2	2.8
FACTORED BEARING RESISTANCE (PSF)	2,500	4,000

NOTES
1. THE WALL HEIGHT INCLUDES AN EMBEDMENT OF 1.5 FEET
2. THE LENGTH OF REINFORCEMENT IS THE MINIMUM LENGTH (8 FEET) REQUIRED BY WISDOT
3. SELECTION OF THE LOWER VALUE BETWEEN DRAINED AND UNDRAINED ANALYSIS RESULTS
* CONTROLLING DESIGN ISSUE
** FINAL DESIGN FOR INTERNAL STABILITY IS THE RESPONSIBILITY OF THE CONTRACTOR'S WALL DESIGNER

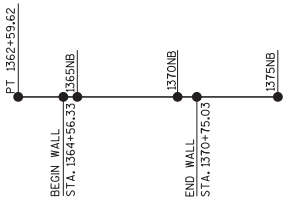

HORIZONTAL ALIGNMENT USH 41 NB

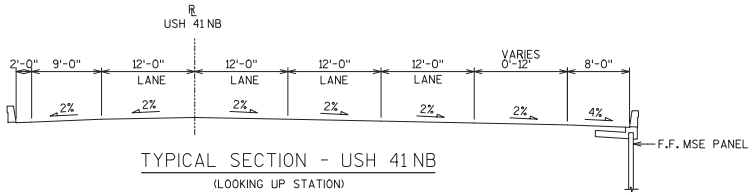

TYPICAL SECTION - USH 41 NB

(LOOKING UP STATION)

HORIZONTAL ALIGNMENT RAMP 'FEN'

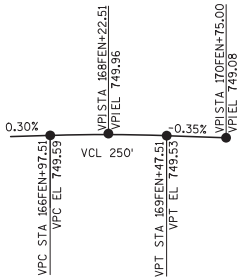

PROFILE GRADE LINE RAMP 'FEN'

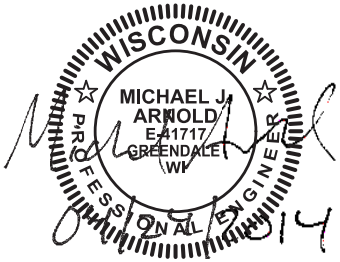

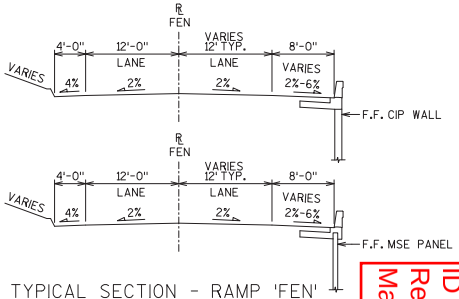

TYPICAL SECTION - RAMP 'FEN'

(LOOKING UP STATION)

William C. Dreher KAR 04/25/14

NO.	DATE	REVISION	BY
1	4.24.14	TOP OF WALL ELEVATIONS	MJA

STATE OF WISCONSIN
DEPARTMENT OF TRANSPORTATION

STRUCTURE R-70-115

DRAWN BY MRL | PLANS CK'D. JDB

DESIGN DATA AND QUANTITIES

SHEET 2 OF 11

441

Addendum No. 1
ID 1517-07-72
Revised Sheet 441
May 5, 2014

FILE= P:\Transportation\US 10 WIS 441\CADD\sheets\Structures\R-70-115\Sheets\Final\02-R-70-115_qu.dgn

DATE: 4/24/2014

I.D.

8

8

USH 41 NB 3

STATION	Distance	AREA (SF) Cut	AREA (SF) Fill	Incremental Vol (CY) (Unadjusted) Cut	Fill	EBS	Structure Fill	Structure Excavation	Cumulative Vol (CY) Cut	Fill	Mass Ordinate
1364+74 AH	0.00	66.30	6.50	0.00	0.00	0.00	0.00	0.00	0.00	0.00	0.00
1365+00	25.85	73.60	3.30	66.97	4.69	0.00	0.00	0.00	66.97	4.69	62.28
1365+50	50.00	54.73	4.60	118.82	7.31	0.00	0.00	0.00	185.79	12.01	173.79
1366+00	50.00	61.40	2.00	107.53	6.11	0.00	0.00	0.00	293.32	18.12	275.21
1366+50	50.00	58.06	2.83	110.61	4.47	0.00	0.00	0.00	403.93	22.59	381.34
1367+00	50.00	66.01	0.79	114.88	3.35	0.00	0.00	0.00	518.81	25.94	492.87
1367+50	50.00	61.07	0.34	117.67	1.05	0.00	0.00	0.00	636.48	26.99	609.49
1368+00	50.00	63.63	0.00	115.46	0.31	0.00	0.00	0.00	751.94	27.30	724.64
1368+50	50.00	62.31	0.00	116.61	0.00	0.00	0.00	0.00	868.55	27.30	841.25
1369+00	50.00	62.90	0.00	115.94	0.00	0.00	0.00	0.00	984.49	27.30	957.19
1369+50	50.00	66.33	0.00	119.66	0.00	0.00	0.00	0.00	1104.15	27.30	1076.84
1370+00	50.00	73.61	0.00	129.57	0.00	0.00	0.00	0.00	1233.72	27.30	1206.42
1370+50	50.00	68.28	0.67	131.38	0.62	0.00	0.00	0.00	1365.10	27.92	1337.18
1371+00	50.00	79.30	1.30	136.65	1.82	0.00	0.00	0.00	1501.75	29.75	1472.00
1371+50	50.00	86.80	3.40	153.80	4.35	0.00	0.00	0.00	1655.54	34.10	1621.45
1372+00	50.00	77.30	1.70	151.94	4.72	0.00	0.00	0.00	1807.49	38.82	1768.67
1372+50	50.00	68.20	1.20	134.72	2.69	0.00	0.00	0.00	1942.21	41.51	1900.71
1373+00	50.00	69.60	0.30	127.59	1.39	0.00	0.00	0.00	2069.80	42.90	2026.91
1373+50	50.00	68.30	0.10	127.69	0.37	0.00	0.00	0.00	2197.49	43.27	2154.22
1374+00	50.00	70.00	0.00	128.06	0.09	0.00	0.00	0.00	2325.54	43.36	2282.19
1374+50	50.00	65.60	0.00	125.56	0.00	0.00	0.00	0.00	2451.10	43.36	2407.74
1375+00	50.00	60.90	0.00	117.13	0.00	0.00	0.00	0.00	2568.23	43.36	2524.87
1375+50	50.00	61.10	0.00	112.96	0.00	0.00	0.00	0.00	2681.19	43.36	2637.83
1376+00	50.00	66.60	0.00	118.24	0.00	0.00	0.00	0.00	2799.43	43.36	2756.08
1376+50	50.00	68.40	0.00	125.00	0.00	0.00	0.00	0.00	2924.43	43.36	2881.08
1377+00	50.00	62.00	0.00	120.74	0.00	0.00	0.00	0.00	3045.17	43.36	3001.82
1377+50	50.00	61.20	0.00	114.07	0.00	0.00	0.00	0.00	3159.25	43.36	3115.89
1378+00	50.00	66.10	0.00	117.87	0.00	0.00	0.00	0.00	3277.12	43.36	3233.76
1378+50	50.00	66.10	0.00	122.41	0.00	0.00	0.00	0.00	3399.53	43.36	3356.17
1379+00	50.00	61.10	0.00	117.78	0.00	0.00	0.00	0.00	3517.30	43.36	3473.95
1379+50	50.00	56.20	0.00	108.61	0.00	0.00	0.00	0.00	3625.92	43.36	3582.56
1380+00	50.00	55.70	0.00	103.61	0.00	0.00	0.00	0.00	3729.53	43.36	3686.17
1380+50	50.00	59.90	0.00	107.04	0.00	0.00	0.00	0.00	3836.56	43.36	3793.21
1381+00	50.00	61.50	0.10	112.41	0.09	0.00	0.00	0.00	3948.97	43.45	3905.52
1381+50	50.00	60.80	0.10	113.24	0.19	0.00	0.00	0.00	4062.21	43.64	4018.58
1382+00	50.00	57.70	0.30	109.72	0.37	0.00	0.00	0.00	4171.93	44.01	4127.93
1382+50	50.00	60.00	0.70	108.98	0.93	0.00	0.00	0.00	4280.92	44.93	4235.98
1383+00	50.00	57.00	0.80	108.33	1.39	0.00	0.00	0.00	4389.25	46.32	4342.93
1383+50	50.00	53.70	1.10	102.50	1.76	0.00	0.00	0.00	4491.75	48.08	4443.67
1384+00	50.00	57.00	3.30	102.50	4.07	0.00	0.00	0.00	4594.25	52.15	4542.09
1384+50	50.00	53.90	6.20	102.69	8.80	0.00	0.00	0.00	4696.93	60.95	4635.98
1385+00	50.00	52.30	1.40	98.33	7.04	0.00	0.00	0.00	4795.27	67.99	4727.28
1385+50	50.00	59.30	0.00	103.33	1.30	0.00	0.00	0.00	4898.60	69.28	4829.32
1386+00	50.00	66.10	32.40	116.11	30.00	0.00	0.00	0.00	5014.71	99.28	4915.43
1386+50	50.00	68.20	17.80	124.35	46.48	0.00	0.00	0.00	5139.06	145.77	4993.30
1387+00	50.00	52.00	10.30	111.30	26.02	0.00	0.00	0.00	5250.36	171.78	5078.58
1387+40 BK	39.79	54.20	5.10	78.25	11.35	0.00	0.00	0.00	5328.61	183.13	5145.48
			Column totals	5328.61	183.13	0.00	27.28	824.11			

Addendum No. 1
ID 1517-07-72
Revised Sheet 472
May 5, 2014

TNE RAMP

STATION		Distance	AREA (SF) Cut	AREA (SF) Fill	Incremental Vol (CY) (Unadjusted) Cut	Fill	EBS	Structure Fill	Structure Excavation	Cumulative Vol (CY) Cut	Fill	Mass Ordinate
20+66	AH	0.00	34.50	1.60	0.00	0.00	0.00	0.00	0.00	0.00	0.00	0.00
21+00		34.25	37.70	2.60	45.79	2.66	0.00	0.00	0.00	45.79	2.66	43.13
21+50		50.00	42.80	2.90	74.54	5.09	0.00	0.00	0.00	120.33	7.76	112.57
22+00		50.00	46.00	3.20	82.22	5.65	0.00	0.00	0.00	202.55	13.40	189.15
22+50		50.00	43.70	2.30	83.06	5.09	0.00	0.00	0.00	285.61	18.50	267.11
23+00		50.00	42.30	1.50	79.63	3.52	0.00	0.00	0.00	365.24	22.02	343.22
23+50		50.00	57.80	0.40	92.69	1.76	0.00	0.00	0.00	457.92	23.78	434.15
24+00		50.00	74.60	0.30	122.59	0.65	0.00	0.00	0.00	580.52	24.42	556.09
24+50		50.00	43.80	0.80	109.63	1.02	0.00	0.00	0.00	690.15	25.44	664.70
25+00		50.00	42.00	0.70	79.44	1.39	0.00	0.00	0.00	769.59	26.83	742.76
25+50		50.00	30.10	1.90	66.76	2.41	0.00	0.00	0.00	836.35	29.24	807.11
26+00		50.00	17.80	6.90	44.35	8.15	0.00	0.00	0.00	880.70	37.39	843.31
26+50		50.00	15.90	29.00	31.20	33.24	0.00	0.00	0.00	911.90	70.63	841.28
27+00		50.00	9.50	86.70	23.52	107.13	0.00	0.00	0.00	935.42	177.76	757.67
27+50		50.00	13.40	184.90	21.20	251.48	0.00	0.00	0.00	956.63	429.24	527.39
28+00		50.00	26.30	264.10	36.76	415.74	0.00	0.00	0.00	993.39	844.98	148.41
28+50		50.00	27.30	250.60	49.63	476.57	0.00	0.00	0.00	1043.02	1321.55	-278.54
29+00		50.00	26.50	49.90	49.81	278.24	0.00	0.00	0.00	1092.83	1599.79	-506.96
29+50		50.00	30.10	1.40	52.41	47.50	0.00	0.00	0.00	1145.24	1647.29	-502.06
29+83	BK	33.16	29.60	0.00	36.66	0.86	0.00	0.00	0.00	1181.90	1648.15	-466.26
				Column totals	1181.90	1648.15	0.00	0.00	0.00			

Addendum No. 1
ID 1517-07-72
Revised Sheet 481
May 5, 2014

9

9

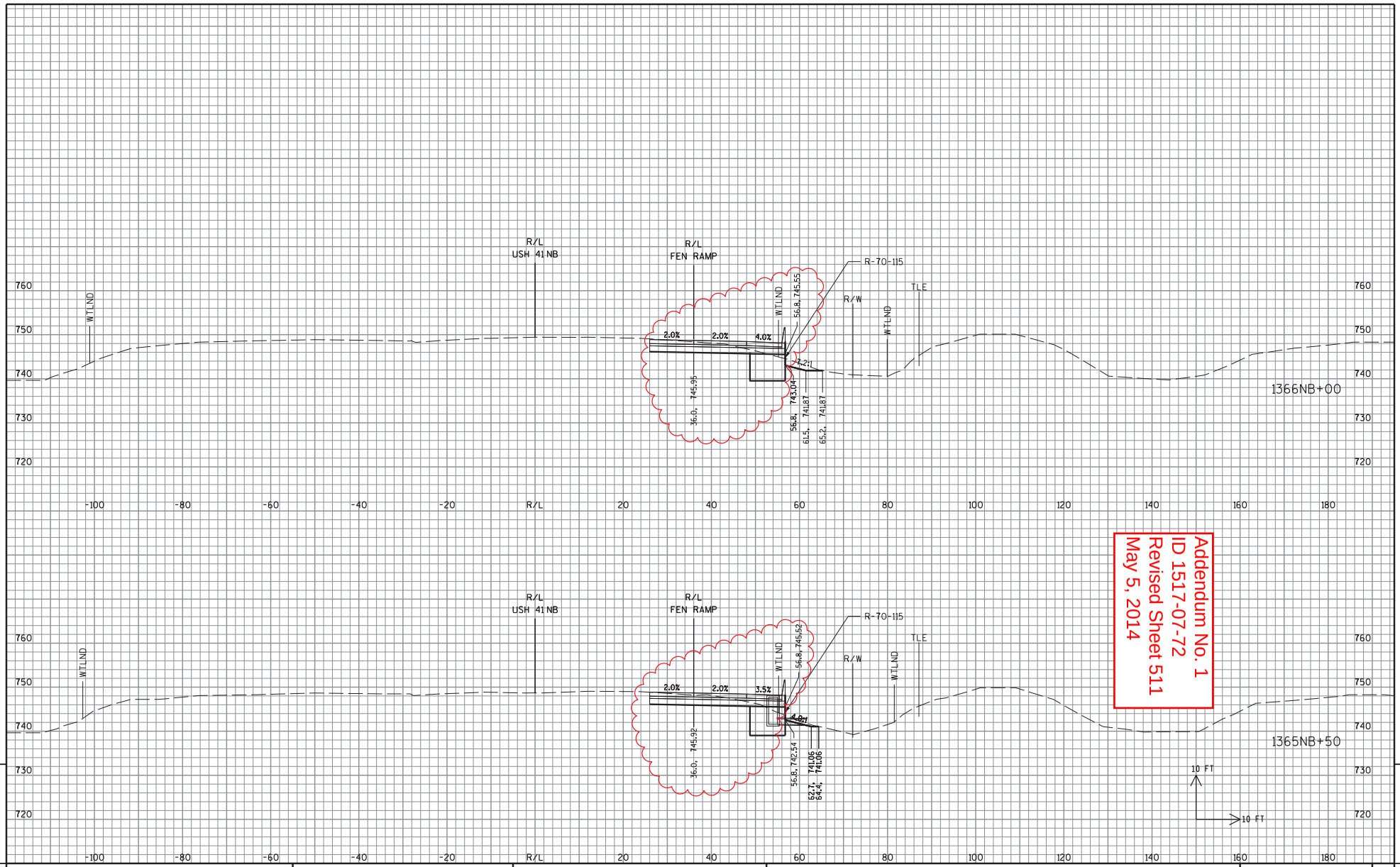

Addendum No. 1
ID 1517-07-72
Revised Sheet 511
May 5, 2014

9

9

STATE PROJECT NO: 1517-07-72	HWY: USH 10	COUNTY: WINNEBAGO	CROSS SECTIONS: USH 41 NB	SHEET NO: 511	E

FILE NAME : S:\DOT\DOT_NE\120012-Tri County Freeway\1517-07-72\DGN_Files\Plansheets\090221_41NB_XS.dgn PLOT DATE : 4/24/2014 PLOT BY : wally_w PLOT NAME : PLOT SCALE : 1:20

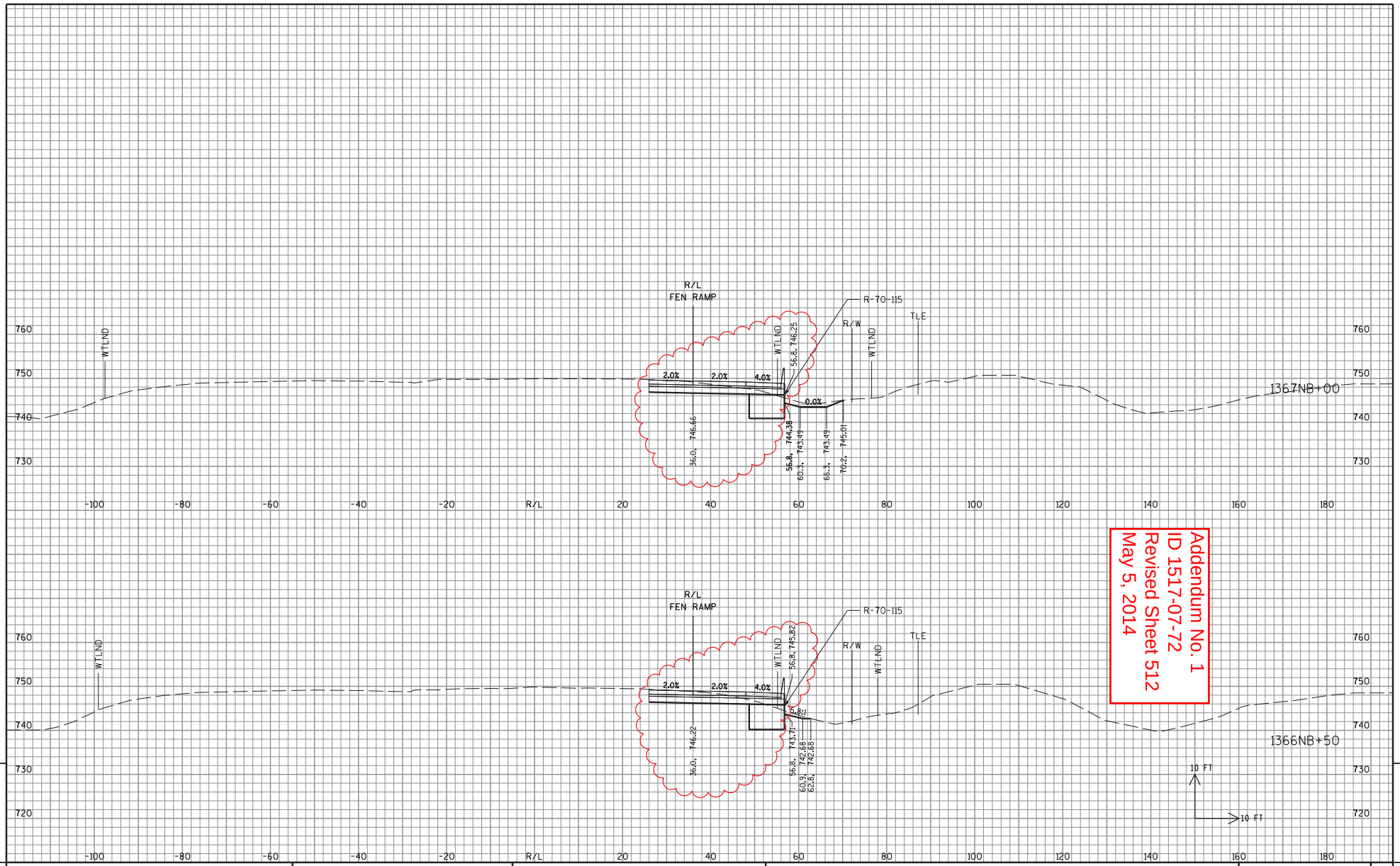

Addendum No. 1
ID 1517-07-72
Revised Sheet 512
May 5, 2014

9

9

STATE PROJECT NO: 1517-07-72	HWY: USH 10	COUNTY: WINNEBAGO	CROSS SECTIONS: USH 41 NB	SHEET NO: 512	E

FILE NAME : S:\DOT\DOT_NE\120012-Tri County Freeway\1517-07-72\DGN_Files\Plansheets\090221_41NB_XS.dgn PLOT DATE : 4/24/2014 PLOT BY : wally_w PLOT NAME : PLOT SCALE : 1:20

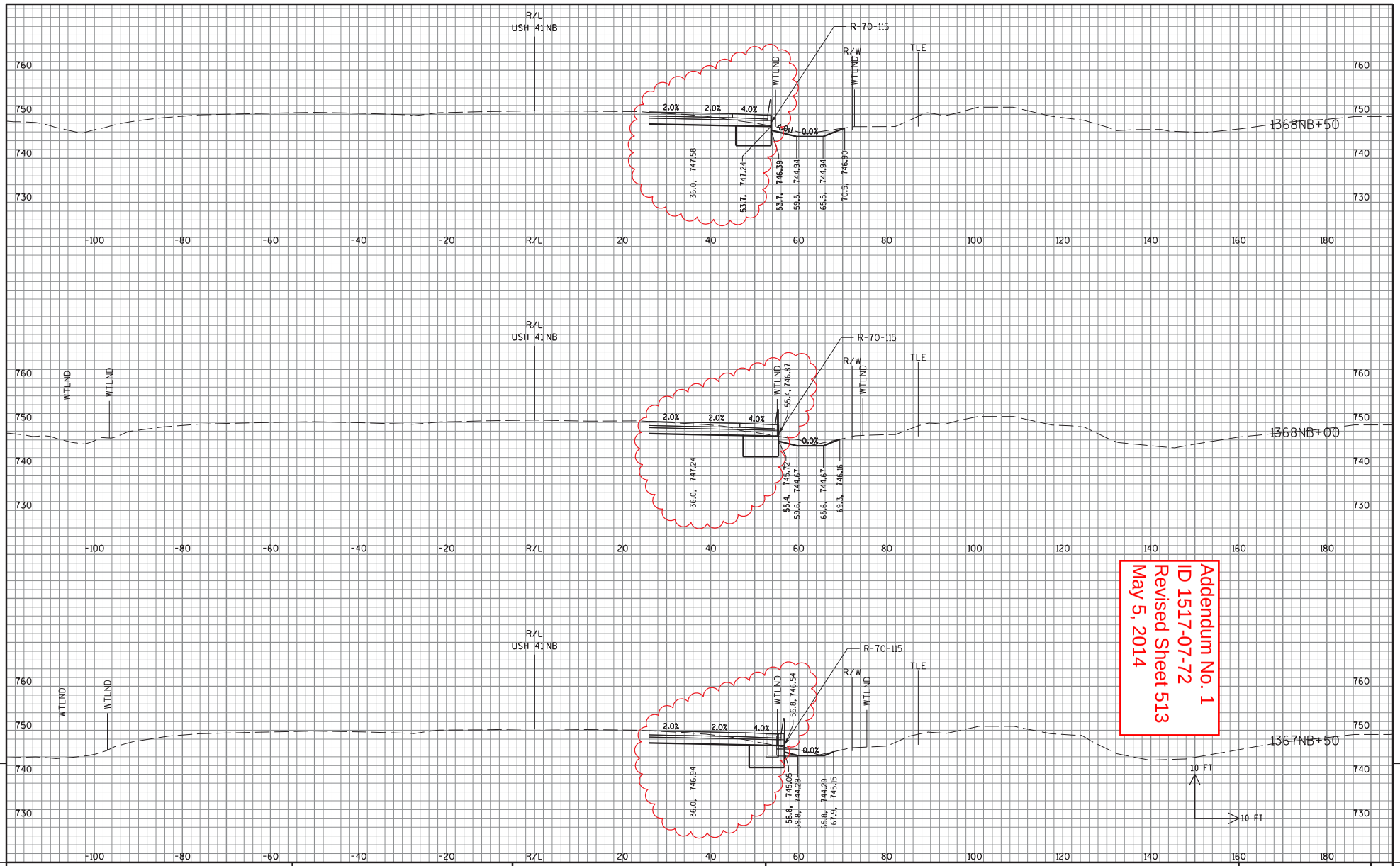

Addendum No. 1
ID 1517-07-72
Revised Sheet 513
May 5, 2014

9

9

STATE PROJECT NO: 1517-07-72	HWY: USH 10	COUNTY: WINNEBAGO	CROSS SECTIONS: USH 41 NB	SHEET NO: 513	E

FILE NAME : S:\DOT\DOT_NE\120012-Tri County Freeway\1517-07-72\DGN_Files\Plansheets\090221_41NB_XS.dgn PLOT DATE : 4/24/2014 PLOT BY : wally_w PLOT NAME : PLOT SCALE : 1:20

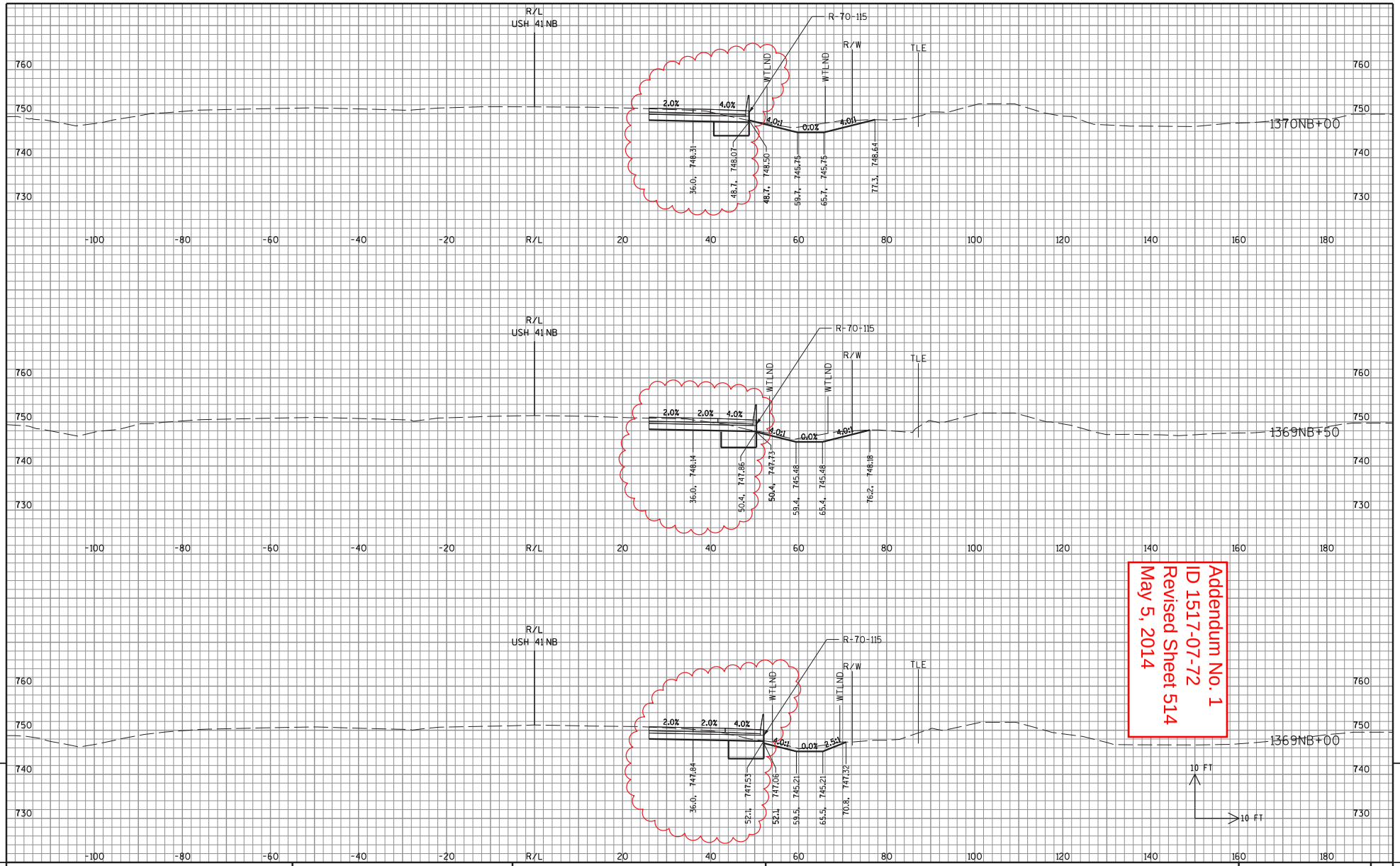

Addendum No. 1
ID 1517-07-72
Revised Sheet 514
May 5, 2014

9

9

STATE PROJECT NO: 1517-07-72	HWY: USH 10	COUNTY: WINNEBAGO	CROSS SECTIONS: USH 41 NB	SHEET NO: 514	E

FILE NAME : S:\DOT\DOT_NE\120012-Tri County Freeway\1517-07-72\DGN_Files\Plansheets\090221_41NB_XS.dgn PLOT DATE : 4/24/2014 PLOT BY : wally_w PLOT NAME : PLOT SCALE : 1:20

Addendum No. 1
ID 1517-07-72
Revised Sheet 515
May 5, 2014

9

9

STATE PROJECT NO: 1517-07-72	HWY: USH 10	COUNTY: WINNEBAGO	CROSS SECTIONS: USH 41NB	SHEET NO: 515	E

FILE NAME : S:\DOT\DOT_NE\120012-Tri County Freeway\1517-07-72\DGN_Files\Plansheets\090221_41NB_XS.dgn PLOT DATE : 4/24/2014 PLOT BY : wally_w PLOT NAME : PLOT SCALE : 1:20

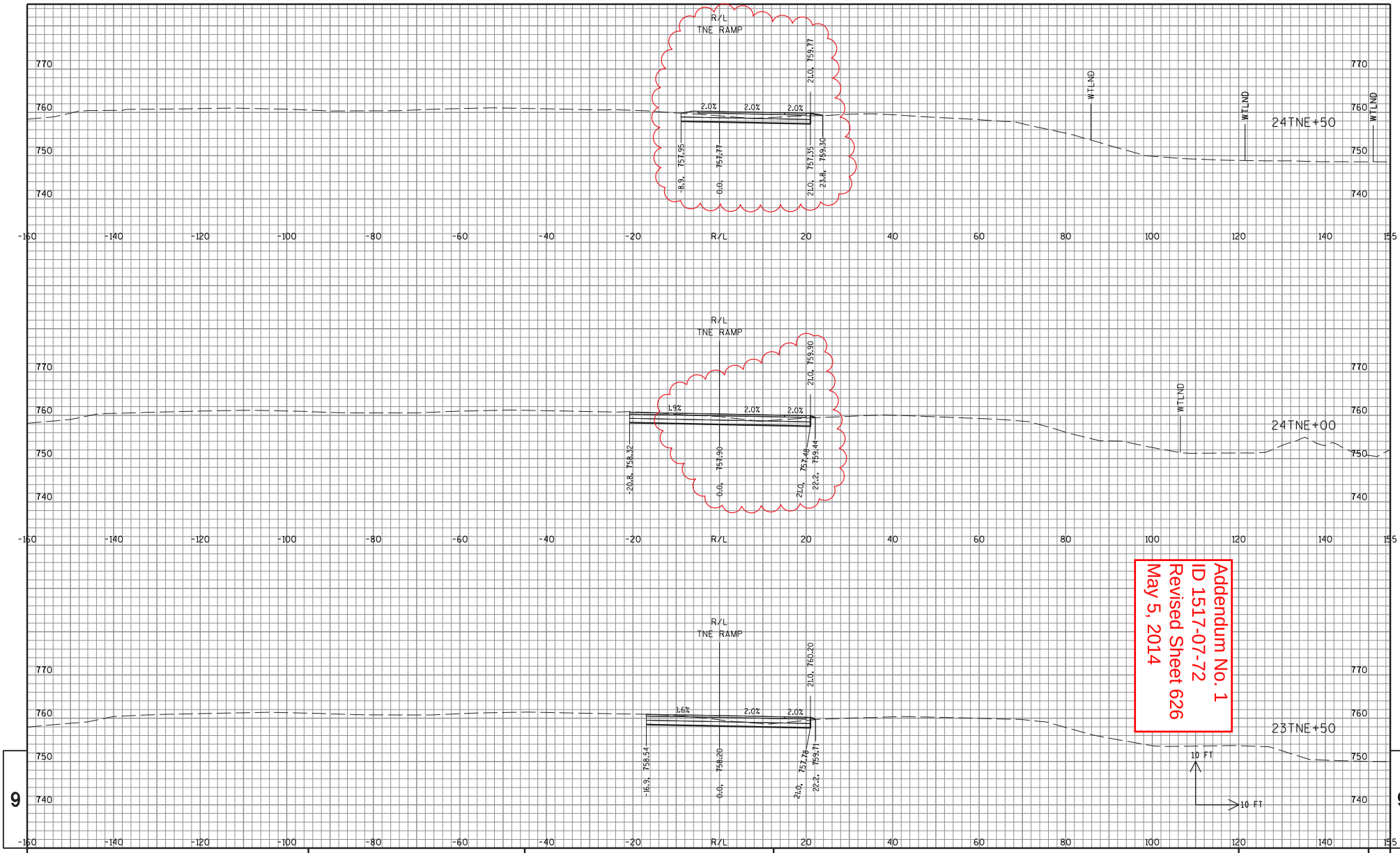

Addendum No. 1
ID 1517-07-72
Revised Sheet 626
May 5, 2014

9

9

STATE PROJECT NO: 1517-07-72	HWY: USH 10	COUNTY: WINNEBAGO	CROSS SECTIONS: TNE RAMP	SHEET NO: 626	E

FILE NAME : S:\DOT\DOT_NE\120012-Tri County Freeway\1517-07-72\DGN_Files\Plansheets\090300_TNE_XS.dgn PLOT DATE : 4/17/2014 PLOT BY : wally_w PLOT NAME : PLOT SCALE : 1:20

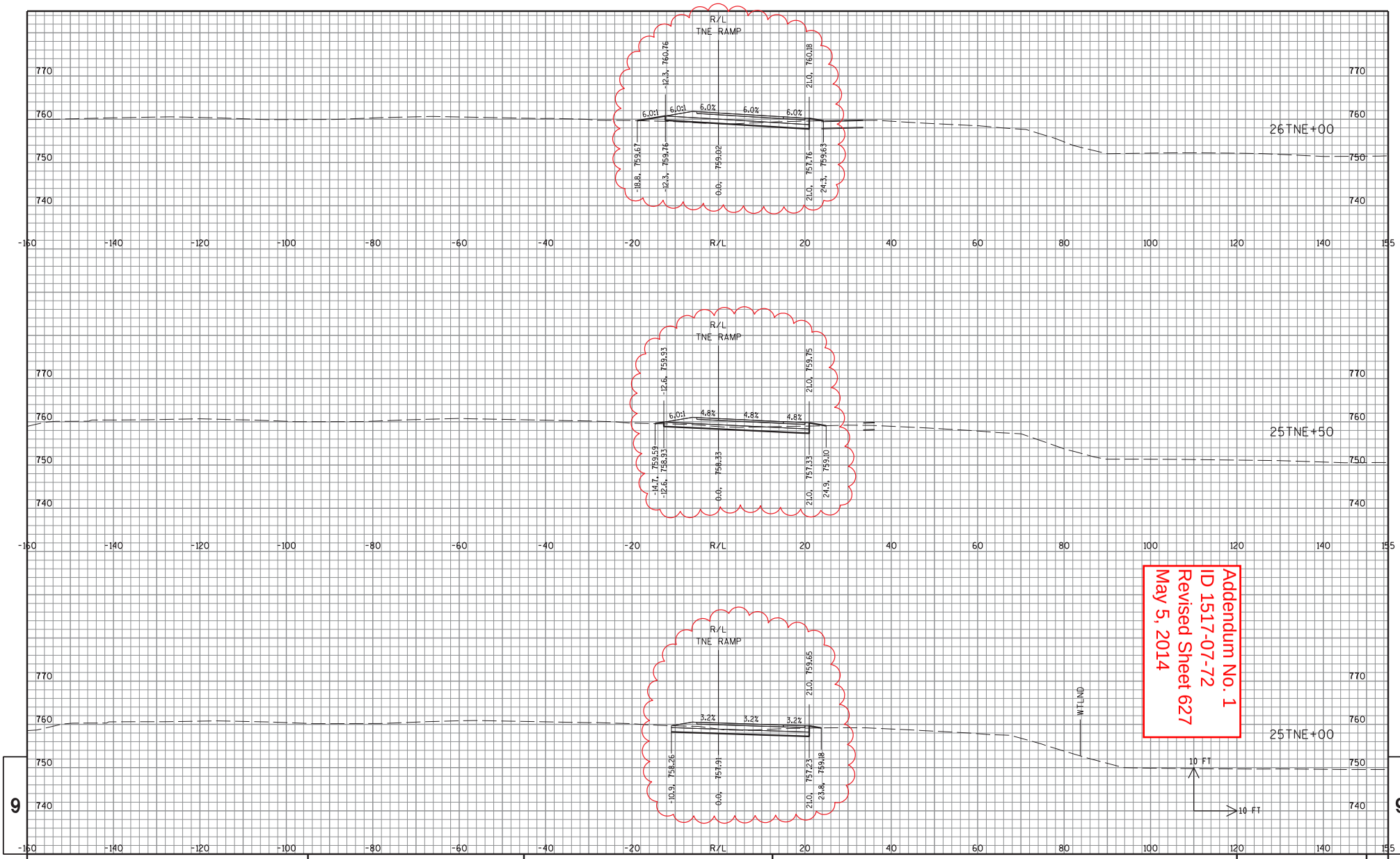

Addendum No. 1
ID 1517-07-72
Revised Sheet 627
May 5, 2014

9

9

STATE PROJECT NO: 1517-07-72	HWY: USH 10	COUNTY: WINNEBAGO	CROSS SECTIONS: TNE RAMP	SHEET NO: 627	E

FILE NAME : S:\DOT\DOT_NE\120012-Tri County Freeway\1517-07-72\DGN_Files\Plansheets\090300_TNE_XS.dgn PLOT DATE : 4/17/2014 PLOT BY : wally_w PLOT NAME : PLOT SCALE : 1:20

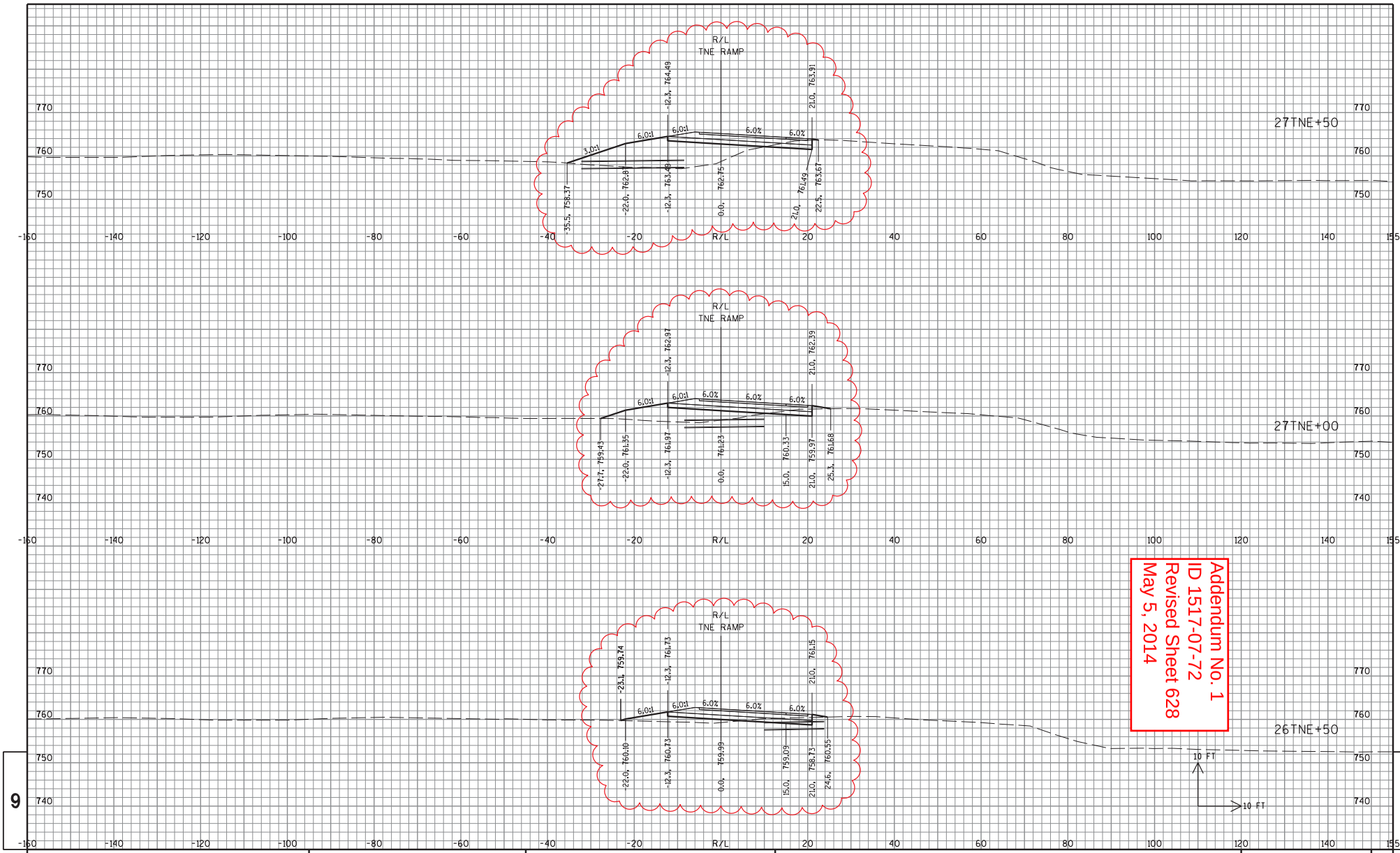

Addendum No. 1
ID 1517-07-72
Revised Sheet 628
May 5, 2014

9

9

STATE PROJECT NO: 1517-07-72	HWY: USH 10	COUNTY: WINNEBAGO	CROSS SECTIONS: TNE RAMP	SHEET NO: 628	E

FILE NAME : S:\DOT\DOT_NE\120012-Tri County Freeway\1517-07-72\DGN_Files\Plansheets\090300_TNE_XS.dgn PLOT DATE : 4/17/2014 PLOT BY : wally_w PLOT NAME : PLOT SCALE : 1:20

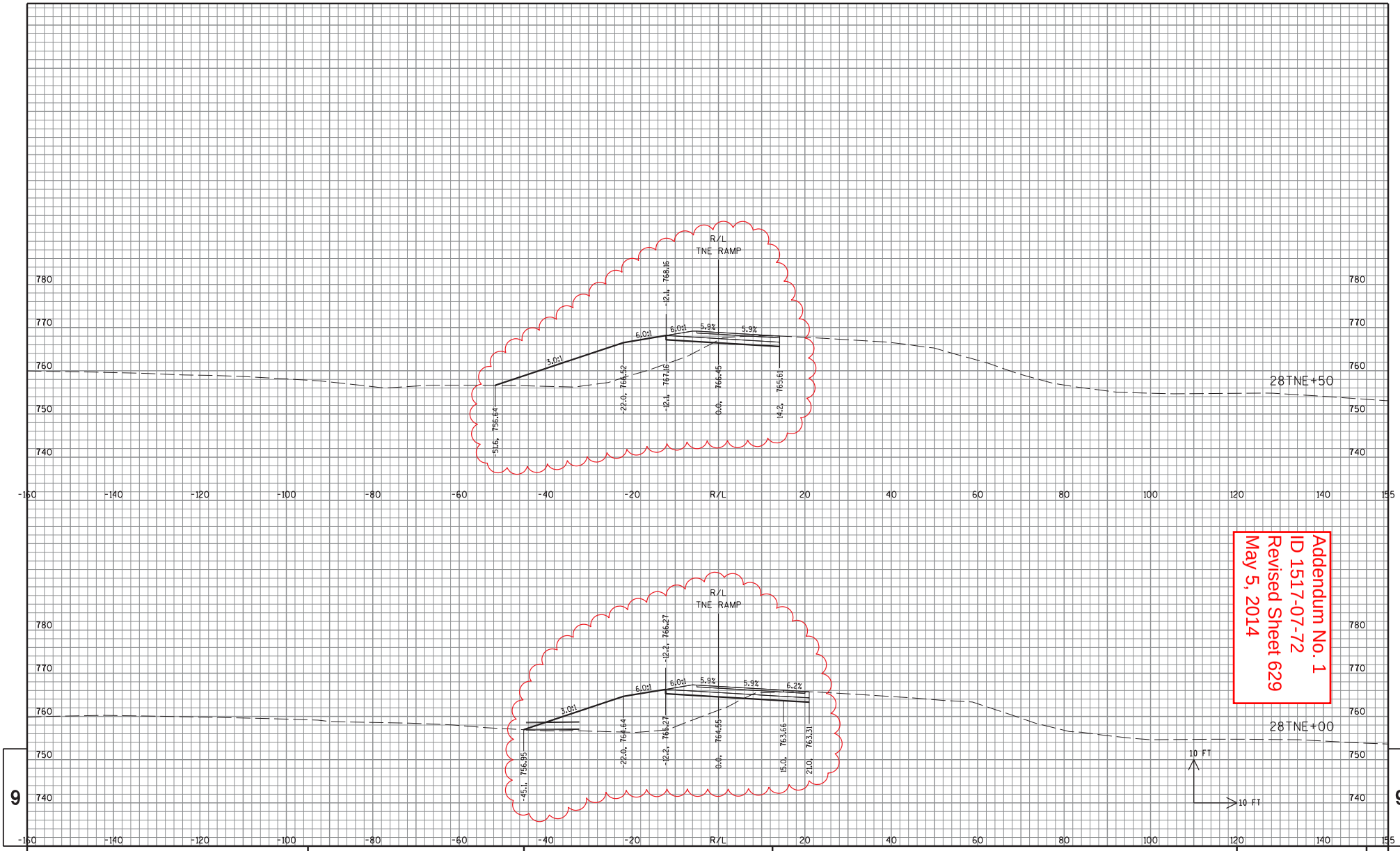

Addendum No. 1
ID 1517-07-72
Revised Sheet 629
May 5, 2014

9

9

STATE PROJECT NO: 1517-07-72	HWY: USH 10	COUNTY: WINNEBAGO	CROSS SECTIONS: TNE RAMP	SHEET NO: 629	E

FILE NAME : S:\DOT\DOT_NE\120012-Tri County Freeway\1517-07-72\DGN_Files\Plansheets\090300_TNE_XS.dgn PLOT DATE : 4/17/2014 PLOT BY : wally_w PLOT NAME : PLOT SCALE : 1:20

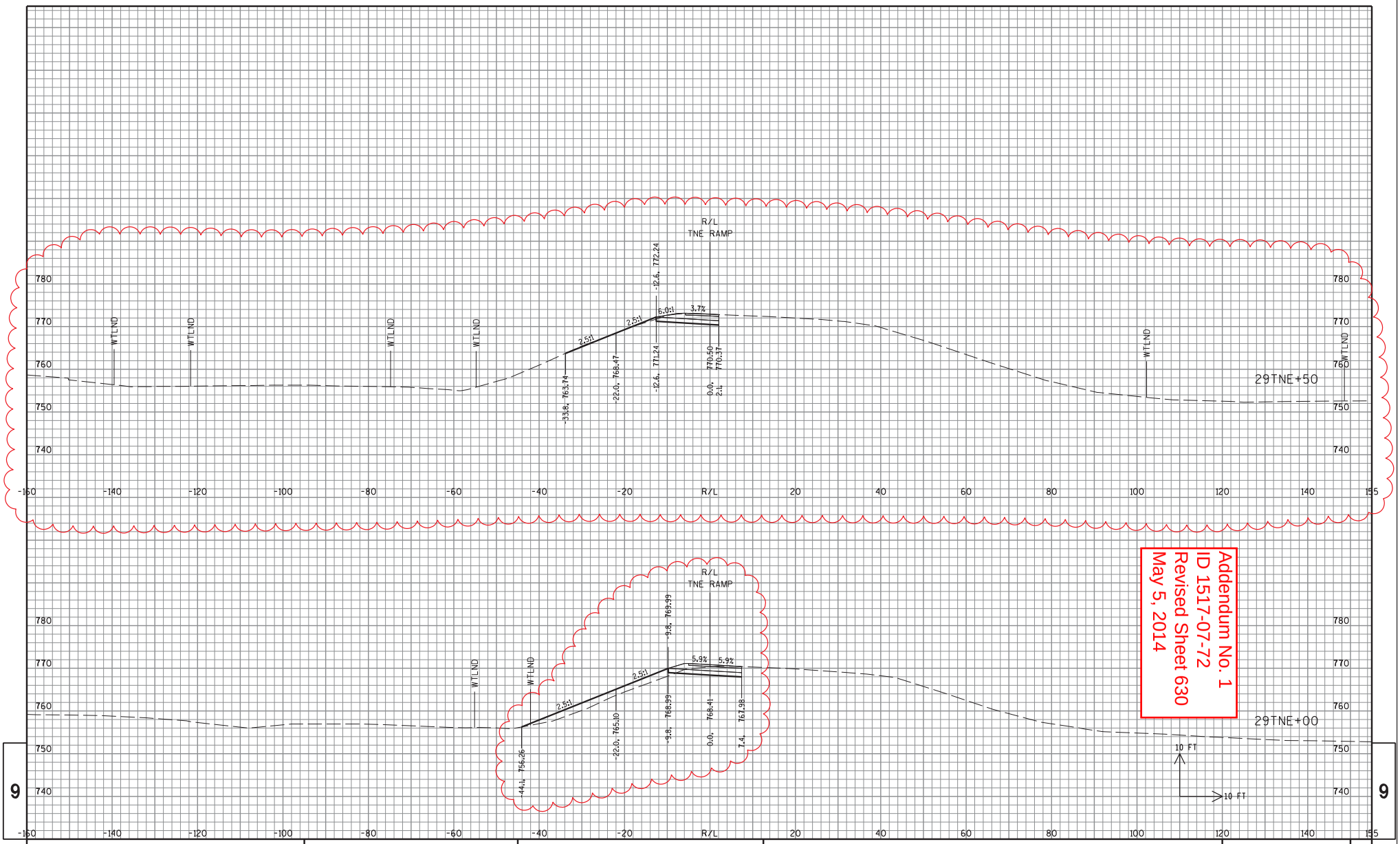

9

9

STATE PROJECT NO: 1517-07-72	HWY: USH 10	COUNTY: WINNEBAGO	CROSS SECTIONS: TNE RAMP	SHEET NO: 630	E

FILE NAME : S:\DOT\DOT_NE\120012-Tri County Freeway\1517-07-72\DGN_Files\Plansheets\090300_TNE_XS.dgn PLOT DATE : 4/17/2014 PLOT BY : wally_w PLOT NAME : PLOT SCALE : 1:20

END CONSTRUCTION STA 29TNE+83.16

Addendum No. 1
ID 1517-07-72
Added Sheet 630A
May 5, 2014

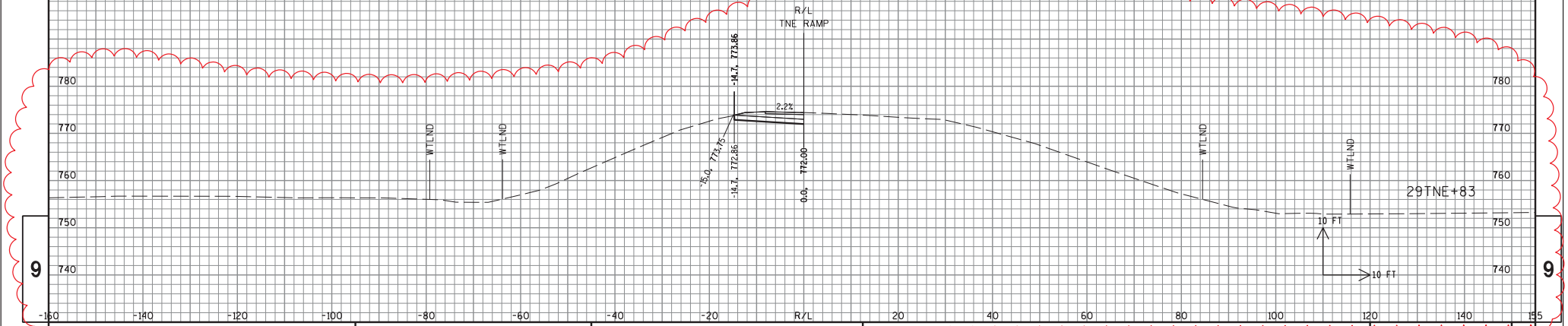

9

9

STATE PROJECT NO: 1517-07-72 | HWY: USH 10 | COUNTY: WINNEBAGO | CROSS SECTIONS: TNE RAMP | SHEET NO: 630A | E

FILE NAME : S:\DOT\DOT_NE\120012-Tri County Freeway\1517-07-72\DGN_Files\Plansheets\090300_TNE_XS.dgn PLOT DATE : 4/17/2014 PLOT BY : wally_w PLOT NAME : PLOT SCALE : 1:20

CONTRACT: 20140513026
PROJECT(S): 1517-07-72
FEDERAL ID(S): N/A

CONTRACTOR :_____

LINE NO	ITEM DESCRIPTION	APPROX. QUANTITY AND UNITS	UNIT PRICE DOLLARS	UNIT PRICE CTS	BID AMOUNT DOLLARS	BID AMOUNT CTS
	SECTION 0001 ROADWAY					
0010	108.4400 CPM PROGRESS SCHEDULE	1.000 EACH	.		.	
0020	201.0105 CLEARING	119.000 STA	.		.	
0030	201.0205 GRUBBING	119.000 STA	.		.	
0040	203.0100 REMOVING SMALL PIPE CULVERTS	2.000 EACH	.		.	
0050	203.0200 REMOVING OLD STRUCTURE (STATION) 750. 1324FNE+25	LUMP	LUMP			.
0060	203.0200 REMOVING OLD STRUCTURE (STATION) 751. 120FEN+50	LUMP	LUMP			.
0070	203.0600.S REMOVING OLD STRUCTURE OVER WATERWAY WITH MINIMAL DEBRIS (STATION) 699. 176FEN+91. 99	LUMP	LUMP			.
0080	204.0100 REMOVING PAVEMENT	6,298.000 SY	.		.	
0100	204.0170 REMOVING FENCE	6,694.000 LF	.		.	

CONTRACT: 20140513026
PROJECT(S): 1517-07-72
FEDERAL ID(S): N/A

CONTRACTOR :_____

LINE NO	ITEM DESCRIPTION	APPROX. QUANTITY AND UNITS		UNIT PRICE DOLLARS	CTS	BID AMOUNT DOLLARS	CTS
0110	204.0180 REMOVING DELINEATORS AND MARKERS	50.000	EACH	.		.	
0120	204.0220 REMOVING INLETS	3.000	EACH	.		.	
0130	204.0245 REMOVING STORM SEWER (SIZE) 001. 12-INCH - 18-INCH	399.000	LF	.		.	
0140	204.0245 REMOVING STORM SEWER (SIZE) 002. 21-INCH -30-INCH	532.000	LF	.		.	
0150	204.9060.S REMOVING (ITEM DESCRIPTION) 001. CONCRETE APRON ENDWALL FOR PIPE UNDERDRAIN	20.000	EACH	.		.	
0170	204.9090.S REMOVING (ITEM DESCRIPTION) 001. UNDERDRAIN	100.000	LF	.		.	
0180	205.0100 EXCAVATION COMMON	90,477.000	CY	.		.	
0190	206.1000 EXCAVATION FOR STRUCTURES BRIDGES (STRUCTURE) 699. B-70-134	LUMP	LUMP				.
0200	206.1000 EXCAVATION FOR STRUCTURES BRIDGES (STRUCTURE) 700. B-70-402	LUMP	LUMP				.
0210	206.2000 EXCAVATION FOR STRUCTURES CULVERTS (STRUCTURE) 750. C-70-42	LUMP	LUMP				.

CONTRACT: 20140513026
PROJECT(S): 1517-07-72
FEDERAL ID(S): N/A

CONTRACTOR :_____

LINE NO	ITEM DESCRIPTION	APPROX. QUANTITY AND UNITS	UNIT PRICE DOLLARS	UNIT PRICE CTS	BID AMOUNT DOLLARS	BID AMOUNT CTS
0220	206.2000 EXCAVATION FOR STRUCTURES CULVERTS (STRUCTURE) 751. C-70-54	LUMP	LUMP			.
0230	206.3000 EXCAVATION FOR STRUCTURES RETAINING WALLS (STRUCTURE) 704. R-70-105	LUMP	LUMP			.
0240	206.3000 EXCAVATION FOR STRUCTURES RETAINING WALLS (STRUCTURE) 705. R-70-115	LUMP	LUMP			.
0250	206.6000.S TEMPORARY SHORING	1,739.000 SF	.			.
0260	210.0100 BACKFILL STRUCTURE	943.000 CY	.			.
0270	213.0100 FINISHING ROADWAY (PROJECT) 001. 1517-07-72	1.000 EACH	.			.
0280	305.0110 BASE AGGREGATE DENSE 3/4-INCH	1,359.000 TON	.			.
0290	305.0120 BASE AGGREGATE DENSE 1 1/4-INCH	31,271.000 TON	.			.
0300	311.0110 BREAKER RUN	54,599.000 TON	.			.
0310	320.0155 CONCRETE BASE 9-INCH	589.000 SY	.			.

CONTRACT: 20140513026
PROJECT(S): 1517-07-72
FEDERAL ID(S): N/A

CONTRACTOR :_____

LINE NO	ITEM DESCRIPTION	APPROX. QUANTITY AND UNITS		UNIT PRICE DOLLARS	CTS	BID AMOUNT DOLLARS	CTS
0320	415.0070 CONCRETE PAVEMENT 7-INCH	7.000	SY	.		.	
0330	415.0410 CONCRETE PAVEMENT APPROACH SLAB	302.000	SY	.		.	
0340	416.0610 DRILLED TIE BARS	1,493.000	EACH	.		.	
0350	416.1110 CONCRETE RUMBLE STRIPS SHOULDER	2,665.000	LF	.		.	
0360	440.4410.S INCENTIVE IRI RIDE	3,286.000	DOL	1.00000		3286.00	
0370	455.0105 ASPHALTIC MATERIAL PG58-28	72.000	TON	.		.	
0380	455.0605 TACK COAT	16.000	GAL	.		.	
0390	460.1100 HMA PAVEMENT TYPE E-0.3	1,313.000	TON	.		.	
0400	460.2000 INCENTIVE DENSITY HMA PAVEMENT	841.000	DOL	1.00000		841.00	
0410	465.0125 ASPHALTIC SURFACE TEMPORARY	4,805.000	TON	.		.	
0420	502.3100 EXPANSION DEVICE (STRUCTURE) 700. B-70-402	LUMP	LUMP			.	

CONTRACT: 20140513026
PROJECT(S): 1517-07-72
FEDERAL ID(S): N/A

CONTRACTOR :_____

LINE NO	ITEM DESCRIPTION	APPROX. QUANTITY AND UNITS		UNIT PRICE DOLLARS	CTS	BID AMOUNT DOLLARS	CTS
0430	502.3200 PROTECTIVE SURFACE TREATMENT	4,164.000	SY	.		.	
0440	502.5002 MASONRY ANCHORS TYPE L NO. 4 BARS	116.000	EACH	.		.	
0450	502.5010 MASONRY ANCHORS TYPE L NO. 6 BARS	60.000	EACH	.		.	
0460	503.0128 PRESTRESSED GIRDER TYPE I 28-INCH	39.000	LF	.		.	
0470	503.0146 PRESTRESSED GIRDER TYPE I 45W-INCH	2,507.000	LF	.		.	
0480	504.0100 CONCRETE MASONRY CULVERTS	108.000	CY	.		.	
0490	504.0500 CONCRETE MASONRY RETAINING WALLS	1,137.000	CY	.		.	
0500	505.0405 BAR STEEL REINFORCEMENT HS BRIDGES	60,084.000	LB	.		.	
0510	505.0410 BAR STEEL REINFORCEMENT HS CULVERTS	15,230.000	LB	.		.	
0520	505.0605 BAR STEEL REINFORCEMENT HS COATED BRIDGES	430,459.000	LB	.		.	
0530	505.0610 BAR STEEL REINFORCEMENT HS COATED CULVERTS	4,000.000	LB	.		.	

CONTRACT: 20140513026 PROJECT(S): 1517-07-72 FEDERAL ID(S): N/A

CONTRACTOR :_____

LINE NO	ITEM DESCRIPTION	APPROX. QUANTITY AND UNITS	UNIT PRICE DOLLARS	UNIT PRICE CTS	BID AMOUNT DOLLARS	BID AMOUNT CTS
0540	505.0615 BAR STEEL REINFORCEMENT HS COATED RETAINING WALLS	122,230.000 LB	.		.	
0550	506.2605 BEARING PADS ELASTOMERIC NON-LAMINATED	22.000 EACH	.		.	
0560	506.4000 STEEL DIAPHRAGMS (STRUCTURE) 699. B-70-134	1.000 EACH	.		.	
0570	506.4000 STEEL DIAPHRAGMS (STRUCTURE) 700. B-70-402	48.000 EACH	.		.	
0580	506.6000 BEARING ASSEMBLIES EXPANSION (STRUCTURE) 700. B-70-402	40.000 EACH	.		.	
0590	509.5100.S POLYMER OVERLAY	2,443.000 SY	.		.	
0600	513.2000 RAILING PIPE (STRUCTURE) 701. R-70-100	LUMP	LUMP		.	
0610	513.2000 RAILING PIPE (STRUCTURE) 702. R-70-102	LUMP	LUMP		.	
0620	514.0450 FLOOR DRAINS TYPE WF	1.000 EACH	.		.	
0630	516.0500 RUBBERIZED MEMBRANE WATERPROOFING	240.000 SY	.		.	

CONTRACT: 20140513026
PROJECT(S): 1517-07-72
FEDERAL ID(S): N/A

CONTRACTOR :_____

LINE NO	ITEM DESCRIPTION	APPROX. QUANTITY AND UNITS		UNIT PRICE DOLLARS	CTS	BID AMOUNT DOLLARS	CTS
0640	517.1010.S CONCRETE STAINING (STRUCTURE) 700. B-70-402	24,583.000	SF	.		.	
0650	517.1010.S CONCRETE STAINING (STRUCTURE) 701. R-70-100	2,132.000	SF	.		.	
0660	517.1010.S CONCRETE STAINING (STRUCTURE) 702. R-70-102	2,216.000	SF	.		.	
0670	517.1010.S CONCRETE STAINING (STRUCTURE) 703. R-70-121	4,894.000	SF	.		.	
0680	517.1050.S ARCHITECTURAL SURFACE TREATMENT (STRUCTURE) 700. B-70-402	3,444.000	SF	.		.	
0690	517.1050.S ARCHITECTURAL SURFACE TREATMENT (STRUCTURE) 701. R-70-100	1,714.000	SF	.		.	
0700	517.1050.S ARCHITECTURAL SURFACE TREATMENT (STRUCTURE) 702. R-70-102	1,866.000	SF	.		.	
0710	517.1050.S ARCHITECTURAL SURFACE TREATMENT (STRUCTURE) 703. R-70-121	3,464.000	SF	.		.	
0720	520.8000 CONCRETE COLLARS FOR PIPE	10.000	EACH	.		.	
0730	521.1012 APRON ENDWALLS FOR CULVERT PIPE STEEL 12-INCH	1.000	EACH	.		.	

CONTRACT: 20140513026
PROJECT(S): 1517-07-72
FEDERAL ID(S): N/A

CONTRACTOR :_____

LINE NO	ITEM DESCRIPTION	APPROX. QUANTITY AND UNITS		UNIT PRICE DOLLARS	CTS	BID AMOUNT DOLLARS	CTS
0740	522.0315 CULVERT PIPE REINFORCED CONCRETE CLASS IV 15-INCH	242.000	LF	.		.	
0750	522.0324 CULVERT PIPE REINFORCED CONCRETE CLASS IV 24-INCH	167.000	LF	.		.	
0760	522.0524 CULVERT PIPE REINFORCED CONCRETE CLASS V 24-INCH	167.000	LF	.		.	
0770	522.0530 CULVERT PIPE REINFORCED CONCRETE CLASS V 30-INCH	229.000	LF	.		.	
0780	522.1015 APRON ENDWALLS FOR CULVERT PIPE REINFORCED CONCRETE 15-INCH	7.000	EACH	.		.	
0790	522.1024 APRON ENDWALLS FOR CULVERT PIPE REINFORCED CONCRETE 24-INCH	10.000	EACH	.		.	
0800	522.1030 APRON ENDWALLS FOR CULVERT PIPE REINFORCED CONCRETE 30-INCH	2.000	EACH	.		.	
0810	522.1036 APRON ENDWALLS FOR CULVERT PIPE REINFORCED CONCRETE 36-INCH	3.000	EACH	.		.	
0820	522.1042 APRON ENDWALLS FOR CULVERT PIPE REINFORCED CONCRETE 42-INCH	1.000	EACH	.		.	

CONTRACT: 20140513026
PROJECT(S): 1517-07-72
FEDERAL ID(S): N/A

CONTRACTOR :_____

LINE NO	ITEM DESCRIPTION	APPROX. QUANTITY AND UNITS		UNIT PRICE DOLLARS	CTS	BID AMOUNT DOLLARS	CTS
0830	523.0119 CULVERT PIPE REINFORCED CONCRETE HORIZONTAL ELLIPTICAL CLASS HE-III 19X30-INCH	135.000	LF	.		.	
0840	523.0519 APRON ENDWALLS FOR CULVERT PIPE REINFORCED CONCRETE HORIZONTAL ELLIPTICAL 19X30-INCH	4.000	EACH	.		.	
0850	550.0020 PRE-BORING ROCK OR CONSOLIDATED MATERIALS	1,212.000	LF	.		.	
0860	550.0500 PILE POINTS	111.000	EACH	.		.	
0870	550.1100 PILING STEEL HP 10-INCH X 42 LB	1,438.000	LF	.		.	
0880	550.1120 PILING STEEL HP 12-INCH X 53 LB	4,020.000	LF	.		.	
0890	550.1140 PILING STEEL HP 14-INCH X 73 LB	456.000	LF	.		.	
0900	603.1132 CONCRETE BARRIER TYPE S32	76.000	LF	.		.	
0910	603.1142 CONCRETE BARRIER TYPE S42	97.000	LF	.		.	
0920	603.3513 CONCRETE BARRIER TRANSITION TYPE S32 TO S36	1.000	EACH	.		.	

CONTRACT: 20140513026
PROJECT(S): 1517-07-72
FEDERAL ID(S): N/A

CONTRACTOR :_____

LINE NO	ITEM DESCRIPTION	APPROX. QUANTITY AND UNITS	UNIT PRICE DOLLARS	UNIT PRICE CTS	BID AMOUNT DOLLARS	BID AMOUNT CTS
0930	603.3535 CONCRETE BARRIER TRANSITION TYPE S36 TO S42	1.000 EACH	.			.
0940	603.8000 CONCRETE BARRIER TEMPORARY PRECAST DELIVERED	9,126.000 LF	.			.
0950	603.8125 CONCRETE BARRIER TEMPORARY PRECAST INSTALLED	15,869.000 LF	.			.
0960	604.0600 SLOPE PAVING SELECT CRUSHED MATERIAL	419.000 SY	.			.
0970	606.0200 RIPRAP MEDIUM	1,049.000 CY	.			.
0980	606.0300 RIPRAP HEAVY	168.000 CY	.			.
0990	607.0406 STORM SEWER PIPE COMPOSITE 6-INCH	25.000 LF	.			.
1000	608.0312 STORM SEWER PIPE REINFORCED CONCRETE CLASS III 12-INCH	10.000 LF	.			.
1010	608.0315 STORM SEWER PIPE REINFORCED CONCRETE CLASS III 15-INCH	282.000 LF	.			.
1020	608.0324 STORM SEWER PIPE REINFORCED CONCRETE CLASS III 24-INCH	857.000 LF	.			.
1030	608.0336 STORM SEWER PIPE REINFORCED CONCRETE CLASS III 36-INCH	366.000 LF	.			.

CONTRACT: 20140513026 PROJECT(S): 1517-07-72 FEDERAL ID(S): N/A

CONTRACTOR :_____

LINE NO	ITEM DESCRIPTION	APPROX. QUANTITY AND UNITS	UNIT PRICE DOLLARS	UNIT PRICE CTS	BID AMOUNT DOLLARS	BID AMOUNT CTS
1040	608.0424 STORM SEWER PIPE REINFORCED CONCRETE CLASS IV 24-INCH	65.000 LF	.		.	
1050	608.0430 STORM SEWER PIPE REINFORCED CONCRETE CLASS IV 30-INCH	86.000 LF	.		.	
1060	608.0542 STORM SEWER PIPE REINFORCED CONCRETE CLASS V 42-INCH	448.000 LF	.		.	
1070	611.0430 RECONSTRUCTING INLETS	1.000 EACH	.		.	
1080	611.0530 MANHOLE COVERS TYPE J	3.000 EACH	.		.	
1090	611.0627 INLET COVERS TYPE HM	1.000 EACH	.		.	
1100	611.0642 INLET COVERS TYPE MS	8.000 EACH	.		.	
1110	611.0654 INLET COVERS TYPE V	10.000 EACH	.		.	
1120	611.2005 MANHOLES 5-FT DIAMETER	4.000 EACH	.		.	
1130	611.2006 MANHOLES 6-FT DIAMETER	3.000 EACH	.		.	
1140	611.3004 INLETS 4-FT DIAMETER	5.000 EACH	.		.	

CONTRACT: 20140513026 PROJECT(S): 1517-07-72 FEDERAL ID(S): N/A

CONTRACTOR :_____

LINE NO	ITEM DESCRIPTION	APPROX. QUANTITY AND UNITS		UNIT PRICE DOLLARS	CTS	BID AMOUNT DOLLARS	CTS
1150	611.3220 INLETS 2X2-FT	2.000	EACH	.		.	
1160	611.3225 INLETS 2X2.5-FT	6.000	EACH	.		.	
1170	611.3230 INLETS 2X3-FT	1.000	EACH	.		.	
1180	611.3902 INLETS MEDIAN 2 GRATE	4.000	EACH	.		.	
1190	611.9800.S PIPE GRATES	1.000	EACH	.		.	
1200	612.0106 PIPE UNDERDRAIN 6-INCH	526.000	LF	.		.	
1210	612.0212 PIPE UNDERDRAIN UNPERFORATED 12-INCH	78.000	LF	.		.	
1220	612.0406 PIPE UNDERDRAIN WRAPPED 6-INCH	2,501.000	LF	.		.	
1230	612.0806 APRON ENDWALLS FOR UNDERDRAIN REINFORCED CONCRETE 6-INCH	1.000	EACH	.		.	
1240	614.0150 ANCHOR ASSEMBLIES FOR STEEL PLATE BEAM GUARD	5.000	EACH	.		.	
1250	614.0905 CRASH CUSHIONS TEMPORARY	9.000	EACH	.		.	

CONTRACT: 20140513026 PROJECT(S): 1517-07-72 FEDERAL ID(S): N/A

CONTRACTOR :_____

LINE NO	ITEM DESCRIPTION	APPROX. QUANTITY AND UNITS	UNIT PRICE DOLLARS	UNIT PRICE CTS	BID AMOUNT DOLLARS	BID AMOUNT CTS
1260	614.0920 SALVAGED RAIL	1,093.000 LF	.		.	
1270	614.0925 SALVAGED GUARDRAIL END TREATMENTS	8.000 EACH	.		.	
1280	614.2300 MGS GUARDRAIL 3	2,702.000 LF	.		.	
1290	614.2310 MGS GUARDRAIL 3 HS	50.000 LF	.		.	
1300	614.2500 MGS THRIE BEAM TRANSITION	117.000 LF	.		.	
1310	614.2610 MGS GUARDRAIL TERMINAL EAT	5.000 EACH	.		.	
1320	614.2620 MGS GUARDRAIL TERMINAL TYPE 2	4.000 EACH	.		.	
1330	616.0700.S FENCE SAFETY	2,000.000 LF	.		.	
1340	618.0100 MAINTENANCE AND REPAIR OF HAUL ROADS (PROJECT) 001. 1517-07-72	1.000 EACH	.		.	
1350	619.1000 MOBILIZATION	1.000 EACH	.		.	
1360	624.0100 WATER	1,746.000 MGAL	.		.	

CONTRACT: 20140513026 PROJECT(S): 1517-07-72 FEDERAL ID(S): N/A

CONTRACTOR :_____

LINE NO	ITEM DESCRIPTION	APPROX. QUANTITY AND UNITS	UNIT PRICE DOLLARS	UNIT PRICE CTS	BID AMOUNT DOLLARS	BID AMOUNT CTS
1370	625.0500 SALVAGED TOPSOIL	128,371.000 SY	.		.	
1380	627.0200 MULCHING	54,141.000 SY	.		.	
1390	628.1104 EROSION BALES	639.000 EACH	.		.	
1400	628.1504 SILT FENCE	11,073.000 LF	.		.	
1410	628.1520 SILT FENCE MAINTENANCE	11,073.000 LF	.		.	
1420	628.1905 MOBILIZATIONS EROSION CONTROL	16.000 EACH	.		.	
1430	628.1910 MOBILIZATIONS EMERGENCY EROSION CONTROL	8.000 EACH	.		.	
1440	628.2002 EROSION MAT CLASS I TYPE A	20,618.000 SY	.		.	
1450	628.2004 EROSION MAT CLASS I TYPE B	57,680.000 SY	.		.	
1460	628.2023 EROSION MAT CLASS II TYPE B	6,348.000 SY	.		.	
1470	628.2033 EROSION MAT CLASS III TYPE B	89.000 SY	.		.	

CONTRACT: 20140513026 PROJECT(S): 1517-07-72 FEDERAL ID(S): N/A

CONTRACTOR :_____

LINE NO	ITEM DESCRIPTION	APPROX. QUANTITY AND UNITS	UNIT PRICE DOLLARS	UNIT PRICE CTS	BID AMOUNT DOLLARS	BID AMOUNT CTS
1480	628.6005 TURBIDITY BARRIERS	1,550.000 SY	.		.	
1490	628.7005 INLET PROTECTION TYPE A	33.000 EACH	.		.	
1500	628.7010 INLET PROTECTION TYPE B	14.000 EACH	.		.	
1510	628.7015 INLET PROTECTION TYPE C	3.000 EACH	.		.	
1520	628.7020 INLET PROTECTION TYPE D	4.000 EACH	.		.	
1530	628.7504 TEMPORARY DITCH CHECKS	978.000 LF	.		.	
1540	628.7555 CULVERT PIPE CHECKS	51.000 EACH	.		.	
1550	628.7560 TRACKING PADS	17.000 EACH	.		.	
1560	628.7570 ROCK BAGS	70.000 EACH	.		.	
1570	629.0205 FERTILIZER TYPE A	74.300 CWT	.		.	
1580	630.0120 SEEDING MIXTURE NO. 20	3,401.000 LB	.		.	

CONTRACT: 20140513026 PROJECT(S): 1517-07-72 FEDERAL ID(S): N/A

CONTRACTOR :_____

LINE NO	ITEM DESCRIPTION	APPROX. QUANTITY AND UNITS	UNIT PRICE DOLLARS	UNIT PRICE CTS	BID AMOUNT DOLLARS	BID AMOUNT CTS
1590	630.0200 SEEDING TEMPORARY	3,465.000 LB	.		.	
1600	631.1100 SOD EROSION CONTROL	150.000 SY	.		.	
1610	633.5200 MARKERS CULVERT END	9.000 EACH	.		.	
1620	634.0616 POSTS WOOD 4X6-INCH X 16-FT	5.000 EACH	.		.	
1630	634.0618 POSTS WOOD 4X6-INCH X 18-FT	4.000 EACH	.		.	
1640	635.0200 SIGN SUPPORTS STRUCTURAL STEEL HS	1,977.000 LB	.		.	
1650	636.0100 SIGN SUPPORTS CONCRETE MASONRY	58.200 CY	.		.	
1660	636.0500 SIGN SUPPORTS STEEL REINFORCEMENT	196.000 LB	.		.	
1670	636.1000 SIGN SUPPORTS STEEL REINFORCEMENT HS	2,740.000 LB	.		.	
1680	636.1500 SIGN SUPPORTS STEEL COATED REINFORCEMENT HS	910.000 LB	.		.	
1690	637.1220 SIGNS TYPE I REFLECTIVE SH	945.500 SF	.		.	

CONTRACT: 20140513026 PROJECT(S): 1517-07-72 FEDERAL ID(S): N/A

CONTRACTOR :_____

LINE NO	ITEM DESCRIPTION	APPROX. QUANTITY AND UNITS	UNIT PRICE DOLLARS	UNIT PRICE CTS	BID AMOUNT DOLLARS	BID AMOUNT CTS
1700	637.2210 SIGNS TYPE II REFLECTIVE H	47.000 SF	.		.	
1710	637.2230 SIGNS TYPE II REFLECTIVE F	108.000 SF	.		.	
1720	638.2102 MOVING SIGNS TYPE II	1.000 EACH	.		.	
1730	638.2601 REMOVING SIGNS TYPE I	1.000 EACH	.		.	
1740	638.2602 REMOVING SIGNS TYPE II	4.000 EACH	.		.	
1750	638.3000 REMOVING SMALL SIGN SUPPORTS	7.000 EACH	.		.	
1760	638.3100 REMOVING STRUCTURAL STEEL SIGN SUPPORTS	2.000 EACH	.		.	
1770	641.1200 SIGN BRIDGE CANTILEVERED (STRUCTURE) 801. S-70-205	LUMP	LUMP		.	
1780	641.1200 SIGN BRIDGE CANTILEVERED (STRUCTURE) 802. S-70-253	LUMP	LUMP		.	
1790	641.6600 SIGN BRIDGE (STRUCTURE) 800. S-70-203	LUMP	LUMP		.	
1800	642.5401 FIELD OFFICE TYPE D	1.000 EACH	.		.	

CONTRACT: 20140513026 PROJECT(S): 1517-07-72 FEDERAL ID(S): N/A

CONTRACTOR :_____

LINE NO	ITEM DESCRIPTION	APPROX. QUANTITY AND UNITS		UNIT PRICE DOLLARS	CTS	BID AMOUNT DOLLARS	CTS
1810	643.0100 TRAFFIC CONTROL (PROJECT) 001. 1517-07-72	1.000	EACH	.		.	
1820	643.0300 TRAFFIC CONTROL DRUMS	61,644.000	DAY	.		.	
1830	643.0420 TRAFFIC CONTROL BARRICADES TYPE III	355.000	DAY	.		.	
1840	643.0705 TRAFFIC CONTROL WARNING LIGHTS TYPE A	709.000	DAY	.		.	
1850	643.0715 TRAFFIC CONTROL WARNING LIGHTS TYPE C	17,964.000	DAY	.		.	
1860	643.0800 TRAFFIC CONTROL ARROW BOARDS	1,238.000	DAY	.		.	
1870	643.0900 TRAFFIC CONTROL SIGNS	29,862.000	DAY	.		.	
1880	643.0910 TRAFFIC CONTROL COVERING SIGNS TYPE I	10.000	EACH	.		.	
1890	643.0920 TRAFFIC CONTROL COVERING SIGNS TYPE II	12.000	EACH	.		.	
1900	643.1050 TRAFFIC CONTROL SIGNS PCMS	1,460.000	DAY	.		.	
1910	645.0113 GEOTEXTILE FABRIC TYPE DF SCHEDULE C	64.000	SY	.		.	

CONTRACT: 20140513026 PROJECT(S): 1517-07-72 FEDERAL ID(S): N/A

CONTRACTOR :_____

LINE NO	ITEM DESCRIPTION	APPROX. QUANTITY AND UNITS		UNIT PRICE DOLLARS	CTS	BID AMOUNT DOLLARS	CTS
1920	645.0120 GEOTEXTILE FABRIC TYPE HR	1,160.000	SY	.		.	
1930	646.0103 PAVEMENT MARKING PAINT 4-INCH	2,675.000	LF	.		.	
1940	646.0106 PAVEMENT MARKING EPOXY 4-INCH	34,017.000	LF	.		.	
1950	646.0123 PAVEMENT MARKING PAINT 8-INCH	356.000	LF	.		.	
1960	646.0126 PAVEMENT MARKING EPOXY 8-INCH	2,148.000	LF	.		.	
1970	646.0600 REMOVING PAVEMENT MARKINGS	28,830.000	LF	.		.	
1980	649.2100 TEMPORARY RAISED PAVEMENT MARKERS	108.000	EACH	.		.	
1990	652.0125 CONDUIT RIGID METALLIC 2-INCH	400.000	LF	.		.	
2000	652.0225 CONDUIT RIGID NONMETALLIC SCHEDULE 40 2-INCH	4,879.000	LF	.		.	
2010	653.0140 PULL BOXES STEEL 24X42-INCH	9.000	EACH	.		.	
2020	653.0222 JUNCTION BOXES 18X12X6-INCH	19.000	EACH	.		.	

CONTRACT: 20140513026
PROJECT(S): 1517-07-72
FEDERAL ID(S): N/A

CONTRACTOR :_____

LINE NO	ITEM DESCRIPTION	APPROX. QUANTITY AND UNITS	UNIT PRICE DOLLARS	UNIT PRICE CTS	BID AMOUNT DOLLARS	BID AMOUNT CTS
2030	654.0107 CONCRETE BASES TYPE 7	5.000 EACH	.		.	
2040	657.6005.S ANCHOR ASSEMBLIES LIGHT POLES ON STRUCTURES	8.000 EACH	.		.	
2050	690.0150 SAWING ASPHALT	330.000 LF	.		.	
2060	690.0250 SAWING CONCRETE	7,452.000 LF	.		.	
2070	715.0415 INCENTIVE STRENGTH CONCRETE PAVEMENT	3,274.000 DOL	1.00000		3274.00	
2080	SPV.0035 SPECIAL 004. DRAINAGE BLANKET	36,603.000 CY	.		.	
2090	SPV.0035 SPECIAL 010. ROADWAY EMBANKMENT	357,907.000 CY	.		.	
2100	SPV.0035 SPECIAL 100. POND LINER CLAY	2,741.000 CY	.		.	
2110	SPV.0035 SPECIAL 700. HIGH PERFORMANCE CONCRETE (HPC) MASONRY STRUCTURES	2,609.000 CY	.		.	
2120	SPV.0045 SPECIAL 050. PCMS REMOTE COMMUNICATIONS	1,460.000 DAY	.		.	

CONTRACT: 20140513026 PROJECT(S): 1517-07-72 FEDERAL ID(S): N/A

CONTRACTOR :_____

LINE NO	ITEM DESCRIPTION	APPROX. QUANTITY AND UNITS	UNIT PRICE DOLLARS	UNIT PRICE CTS	BID AMOUNT DOLLARS	BID AMOUNT CTS
	SPV.0060 SPECIAL 008.					
2130	VIBRATING WIRE PIEZOMETER INSTRUMENTATION SYSTEM DELIVERED	20.000 EACH	.			.
	SPV.0060 SPECIAL 009.					
2140	SETTLEMENT GAUGES	20.000 EACH	.			.
	SPV.0060 SPECIAL 096.					
2150	EMERGENCY SWEEPING MOBILIZATION	12.000 EACH	.			.
	SPV.0060 SPECIAL 100.					
2160	POND OUTLET CONTROL MANHOLE	1.000 EACH	.			.
	SPV.0060 SPECIAL 104.					
2170	STORM SEWER PLUG	5.000 EACH	.			.
	SPV.0060 SPECIAL 107.					
2180	FLARED END SECTION WITH TRASH RACK	1.000 EACH	.			.
	SPV.0060 SPECIAL 108.					
2190	DETENTION POND CORRUGATED METAL ANTI SEEP COLLAR	1.000 EACH	.			.
	SPV.0060 SPECIAL 120.					
2200	COVER PLATES LEFT IN PLACE	8.000 EACH	.			.
	SPV.0060 SPECIAL 202.					
2210	CRASH CUSHION TEMPORARY LEFT IN PLACE	4.000 EACH	.			.
	SPV.0060 SPECIAL 204.					
2220	TEMPORARY THRIE BEAM CONNECTION LEFT IN PLACE	1.000 EACH	.			.

CONTRACT: 20140513026 PROJECT(S): 1517-07-72 FEDERAL ID(S): N/A

CONTRACTOR :_____

LINE NO	ITEM DESCRIPTION	APPROX. QUANTITY AND UNITS	UNIT PRICE DOLLARS	UNIT PRICE CTS	BID AMOUNT DOLLARS	BID AMOUNT CTS
2230	SPV.0060 SPECIAL 350. CONCRETE BASES TYPE 7 SPECIAL	5.000 EACH	.		.	
2240	SPV.0075 SPECIAL 001. STREET SWEEPING	24.000 HRS	.		.	
2250	SPV.0075 SPECIAL 002. EMERGENCY SWEEPING	24.000 HRS	.		.	
2260	SPV.0075 SPECIAL 200. TRUCK MOUNTED ATTENUATOR WITH OPERATOR	50.000 HRS	250.00000		12500.00	
2270	SPV.0075 SPECIAL 201. TRUCK MOUNTED ATTENUATOR WITHOUT OPERATOR	50.000 HRS	100.00000		5000.00	
2280	SPV.0085 SPECIAL 100. POND EDGE SEED	140.000 LB	.		.	
2290	SPV.0085 SPECIAL 800. BAR STEEL REINFORCEMENT HS STAINLESS BRIDGES	1,479.000 LB	.		.	
2300	SPV.0090 SPECIAL 001. CONCRETE CURB & GUTTER 6-INCH SLOPED 60-INCH TYPE A FULL DEPTH	22.000 LF	.		.	
2310	SPV.0090 SPECIAL 006. PREFABRICATED VERTICAL DRAINS	490,490.000 LF	.		.	
2320	SPV.0090 SPECIAL 010. PREBORED PREFABRICATED VERTICAL DRAINS	13,570.000 LF	.		.	

CONTRACT: 20140513026 PROJECT(S): 1517-07-72 FEDERAL ID(S): N/A

CONTRACTOR :_____

LINE NO	ITEM DESCRIPTION	APPROX. QUANTITY AND UNITS		UNIT PRICE DOLLARS	CTS	BID AMOUNT DOLLARS	CTS
2330	SPV.0090 SPECIAL 204. CONCRETE BARRIER TEMPORARY PRECAST LEFT IN PLACE	8,524.000	LF	.		.	
2340	SPV.0105 SPECIAL 001. SURVEY PROJECT I.D. 1517-07-72	LUMP		LUMP		.	
2350	SPV.0105 SPECIAL 007. GEOTECHNICAL INSTRUMENTATION	LUMP		LUMP		.	
2360	SPV.0165 SPECIAL 001. SPRAYED ASPHALT SHOULDER TREATMENT	10,633.000	SF	.		.	
2370	SPV.0165 SPECIAL 250. PERMANENT COVERING TYPE I SIGNS	125.000	SF	.		.	
2380	SPV.0165 SPECIAL 850. PRESTRESSED PRECAST CONCRETE WALL PANEL	4,502.000	SF	.		.	
2390	SPV.0165 SPECIAL 851. WALL CONCRETE PANEL MECHANICALLY STABILIZED EARTH LRFD/QMP PILOT	12,068.000	SF	.		.	
2400	SPV.0165 SPECIAL 852. WALL WIRE FACED MECHANICALLY STABILIZED EARTH LRFD/QMP PILOT	4,502.000	SF	.		.	
2410	SPV.0165 SPECIAL 853. TEMPORARY SHORING LEFT IN PLACE B-70-402	189.000	SF	.		.	
2420	SPV.0180 SPECIAL 001. MODIFIED HIGH PERFORMANCE CONCRETE (HPC) PAVEMENT 11-INCH	13,934.000	SY	.		.	

CONTRACT: 20140513026 PROJECT(S): 1517-07-72 FEDERAL ID(S): N/A

CONTRACTOR :_____

LINE NO	ITEM DESCRIPTION	APPROX. QUANTITY AND UNITS		UNIT PRICE DOLLARS	CTS	BID AMOUNT DOLLARS	CTS
2430	SPV.0180 SPECIAL 002. REMOVING RUMBLE STRIPS	290.000	SY	.		.	
2440	204.0110 REMOVING ASPHALTIC SURFACE	506.000	SY	.		.	
2450	465.0400 ASPHALTIC SHOULDER RUMBLE STRIP	5,487.000	LF	.		.	
2460	520.4012 CULVERT PIPE TEMPORARY 12-INCH	96.000	LF	.		.	
2470	628.6510 SOIL STABILIZER TYPE B	12.000	ACRE	.		.	
2480	SPV.0060 SPECIAL 005. SALVAGE & REINSTALL PIPE UNDERDRAIN AND APRON ENDWALL	1.000	EACH	.		.	
2490	SPV.0120 SPECIAL 001. WATER FOR SEEDED AREAS	2,840.000	MGAL	.		.	
2500	SPV.0200 SPECIAL 050. RECONSTRUCTING SANITARY MANHOLES	16.000	VF	.		.	
	SECTION 0001 TOTAL					.	
	TOTAL BID					.	